ALFA ROMEO

2000 BERLINA

1972 MODEL YEAR

INIEZIONE

OWNER'S MANUAL

U.S. DOT CONSUMER INFORMATION that applies to this vehicle can be found on Pages 18 and 19

Alfawiki.nl

IMPORTANT NOTE

The fuel injection system *tor* the 2000 model has been designed not only to attain high performance and low fuel consumption but also to keep the exhaust emissions below the levels allowed by U.S.A. regulations.

The low exhaust emission levels have been obtained by improving the distribution and combustion. No devices to burn the unburned gases downstream of the exhaust valves are required.

Simple and efficient systems tor controlling crankcase and evaporative emissions are fitted.

Of course, even with the mentioned systems fitted to the Alfa 2000, the emissions will not continue to meet Federal and State regulations unless the owner himself provides to have the prescribed servicing carried out by authorized Alfa Romeo Dealers and provided that, when remedying troubles or performing any maintenance work on the engine or fuel feed system, the factory prescribed procedures are strictly fol\owed.

Alfa Romeo warrants to the original and each subsequent owner of a 1972 Alfa Romeo passenger vehicle, that the vehicle:

1 has been designed and built to conform at the time of sale with those emission requirements issued under the Clean Air Act, section 202 (a) applicable at the time of manufacture;

2 is free trom defects in material and workmanship which would cause it not to conform with those regulations for a period of 50,000 miles or 5 years, whichever occurs first.

By express terms of Federal Law, the emissions contra\ system warranty app\ies only to those vehicles which have been used and maintained according to Alfa Romeo's instructions published in the owner's manual and service coupon booklet. Maintenance records are the responsibility of the vehicle owner, as are the casts of these services.

Federal Law prohibits manufacturers and dealers trom knowingly removing or rendering an emission contra\ system inoperative or ineffective after sale and delivery to an ultimate purchaser.

Owners are advised that they are required to furnish Alfa Romeo with evidence of compliance with the instructions relating to exhaust emission maintenance upon request. 45 C F R 1201.160 (b).

The evidence of compliance can be provided by the coupons and stubs contained in the Service Coupon Booklet described on Page 2

Keep a record of the symbol stamped on the key handle.

Ignition and antitheft key

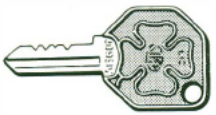

Key to driver's and passenger's door, glove compartment, trunk lid

When ordering duplicate keys, please quote the symbol.

Alfawiki.nl

The operation and maintenance instructions contained in this manual, particularly as far as the efficiency of the fuel injection system is concerned,

MUST BE CAREFULLY OBSERVED

by every owner who desires to get the best from his vehicle and to ensure a long life for every component.

Owners are recommended, in their own interest, to entrust all maintenance and repair work to an authorized Alfa Romeo Dealer as such **Dealers are equipped with the proper tools and staffed by specially trained mechanics.**

Owners are reminded that Alfa Romeo cannot be responsible for any errors made by unauthorized service stations or for any damage resulting from the use of nongenuine spare parts and/or lubricants other than those indicated.

Direzione Assistenza

The data relating to weights, consumptions and speeds are approximate only; Alfa Romeo reserves the right to change without notice procedures and data given in this manual.

Alfawiki.nl

Alfa Romeo take steps to ensure the optimum performance of their cars by providing Owners with special services during the entire life of their vehicles.

The **Service Coupon Book,** supplied with every new vehicle, bears the conditions that govern the provision of Alfa Romeo Services and the replacement of damaged parts during the period covered by the warranty.

Every Owner of an Alfa Romeo vehicle is supplied with two coupons covering certain free maintenance during the warranty period, and he **must use these coupons on completion of the mileage as stated thereon.**

It is important that the coupon book be filled in properly following each routine service. It is a log of maintenance performed on your Alfa Romeo and is subject to inspection. See inside front cover for evidence of compliance requirement.

The labor cost of the maintenance work listed on the coupons is free, but the lubricants and the filtering elements used are at the Owner's expense. Any work not covered by free coupons but found necessary during the inspection will be subject to the General Terms of Warranty. The coupons should be used whenever possible at the garage of the Dealer that sold the car, during normal working hours.

Alfawiki.nl

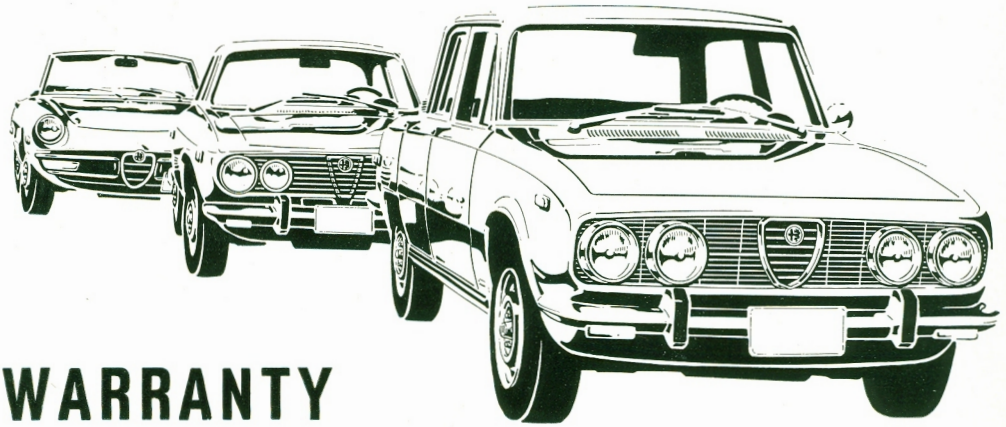

WARRANTY

The Dealer warrants the products of the Factory for 6 months from the date of delivery to the Owner; the warranty does not cover tires and non-essential accessories if made by third parties, nor does it cover spare parts.

The warranty covers the free repair of, or free supply and replacement of, any parts found to be unserviceable **because of an acknowledged defect of materials;** defects will be acknowledged after prior investigation of them and of their causes exclusively by the manufacturer's workshops or by workshops authorized by the manufacturer, and at the said workshops.

Should the Purchaser insist on the services of an Alfa Romeo technician for the purpose of inspecting faulty or allegedly faulty parts, the expenses of such a technician will be the responsibility of the Purchaser.

Delays, if any, shall not entitle the Purchaser to receive compensation for damages, nor to any extension of his rights under the warranty.

The warranty shall lapse automatically:

if the products are used otherwise than in accordance with the manufacturer's instructions;

if they are modified, repaired or disassembled elsewhere than in the manufacturer's workshops or workshops authorized by the manufacturer;

The Purchaser shall not be entitled, in any of the cases stipulated by this article, to claim cancellation of the Contract or compensation for damages.

Alfawiki.nl

Contents

2 Service Coupon Book
3 Warranty
5 Identification

SPECIFICATION
6 Berlina
8 GT Veloce
10 Spider Veloce

CONTROL AND INSTRUMENTS
12 Berlina
14 GT Veloce
16 Spider Veloce

CONSUMER INFORMATION
18 Berlina
20 GT Veloce
22 Spider Veloce

24 **BREAKING IN**

HOW TO USE YOUR CAR
25 Starting the engine - antitheft
26 Starting the engine (from cold, when hot)
27 Light switch
29 Precautions (while driving & parking)
30 Temperature setting
31 Winter precautions

Ventilation, demisting and heating:
32 Berlina
36 Interior: Berlina
40 GT Veloce
44 Interior: GT Veloce
48 Spider Veloce
49 Interior: Spider Veloce
55 Wheel removal
55 Towing
56 Safety belts

LUBRICATION
58 Regular lubrication schedule
59 Regular lubrication and lubricants
60 Engine
61 Oil filter

MAINTENANCE
62 Regular maintenance schedule
63 Regular maintenance

ENGINE MAINTENANCE
64 Tightening torque specifications
65 Valve timing
67 Fuel injection
68 Injection system diagram
71 Air cleaner
71 Fuel filters
73 Vacuum relief valve
74 Injection pump drive belt
77 Idle speed adjustment
78 Ignition
82 Cooling system

CHASSIS MAINTENANCE
85 Clutch
86 Transmission
87 Drive shaft
88 Rear axle
89 Front suspension
90 Rear suspension
91 Steering gear and linkage
92 Front wheels (toe in)
93 Front wheels (camber)
94 Brakes
103 Tire inflation pressures
103 Wheel balancing
104 Tire changing over

106 **BODY MAINTENANCE**

107 **LAYING THE CAR UP PRECAUTIONS**

ELECTRICAL SYSTEM
108 Battery
109 Alternator, starter
110 Replacing a lamp or bulb
113 Headlamp beam setting
115 Engine trouble diagnostic chart
117 Wiring diagrams

Alfawiki.ru

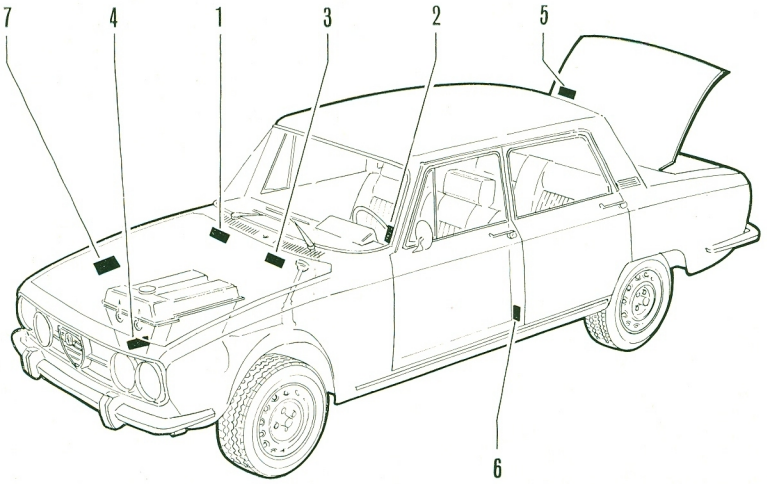

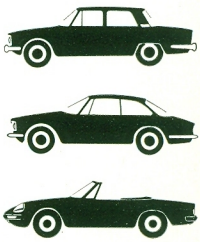

Chassis no. ❶ on firewall
❷ on windshield post

❸ Car model no. on firewall

❹ Engine no. on crankcase R.H. side

❺ Finish plate (paint type & make) on trunk lid

❻ D.O.T. certification label

❼ Emission data label

When contacting a Member of our Service Organization please state: car model no., chassis no., registration date, distance covered and car's purchase data.

Alfawiki.nl

Specification

Engine

Number and layout of cylinders	4 in line
Bore and stroke	84 x 88.5 mm
Total displacement	1962 cc
BHP @ 5800 rpm	* 129 SAE net

* This is a new power rating measured with a new procedure which should not be compared with previous power ratings.

Chassis

Turning circle	36.5 ft
Designated seating capacity	4
Tires	165 HR 14
Curb weight	2442 lbs

Coolant

	IMP.	U.S.A.	METRIC
Alfa Romeo coolant mixture abt.	2.1 gals	2.5 gals	9,7 l

OIL

	IMP.	U.S.A.	METRIC
Engine { ★ when full abt.	5.95 qts	7.1 qts	6,6 l
Engine { danger level »	3.95 qts	4.75 qts	4,4 l
Transmission »	3.2 pts	3.8 pts	1,85 l
Differential »	2.5 pts	3.0 pts	1,4 l
Steering box »	.7 pt	.8 pt	0,4 l
★ This quantity is that needed for regular changing. The total amount of oil in the circuit (pan, filter and passages) is abt.	6.5 qts	7.8 qts	7,16 l

Fuel

	IMP.	U.S.A.	METRIC
Tank capacity abt.	11.9 gals	14.3 gals	54 l
Reserve »	1.3-1.5 gals	1.6-1.8 gals	6-7 l
Lead content (maximum) »	2.9 g/gals	2.4 g/gals	0,635 g/l

Octane requirement

IMPORTANT

Use of the correct fuel cannot be overemphasized. Recent changes in "Octane Ratings" can cause confusion. Below are the octane numbers required for your engine:

— Research method (RON)	91 minimum
— F.T.C. method ★	87 minimum

★ This rating number is required by the Federal Trade Commission to be posted on gasoline pumps in filling stations after March 15, 1972. While it is not an actual measure of an engine's requirement, its purpose is to approximate the actual octane requirement on the road.

PERFORMANCE with 41 : 9 final drive

AFTER BREAKING IN
maximum speeds

GEAR	1st	2nd	3rd	4th	5th	Rev.
mph.	26	44	64	86	112	28

The performances given are related to the use of the vehicle in average travelling conditions.

Alfawiki.nl

2000 BERLINA

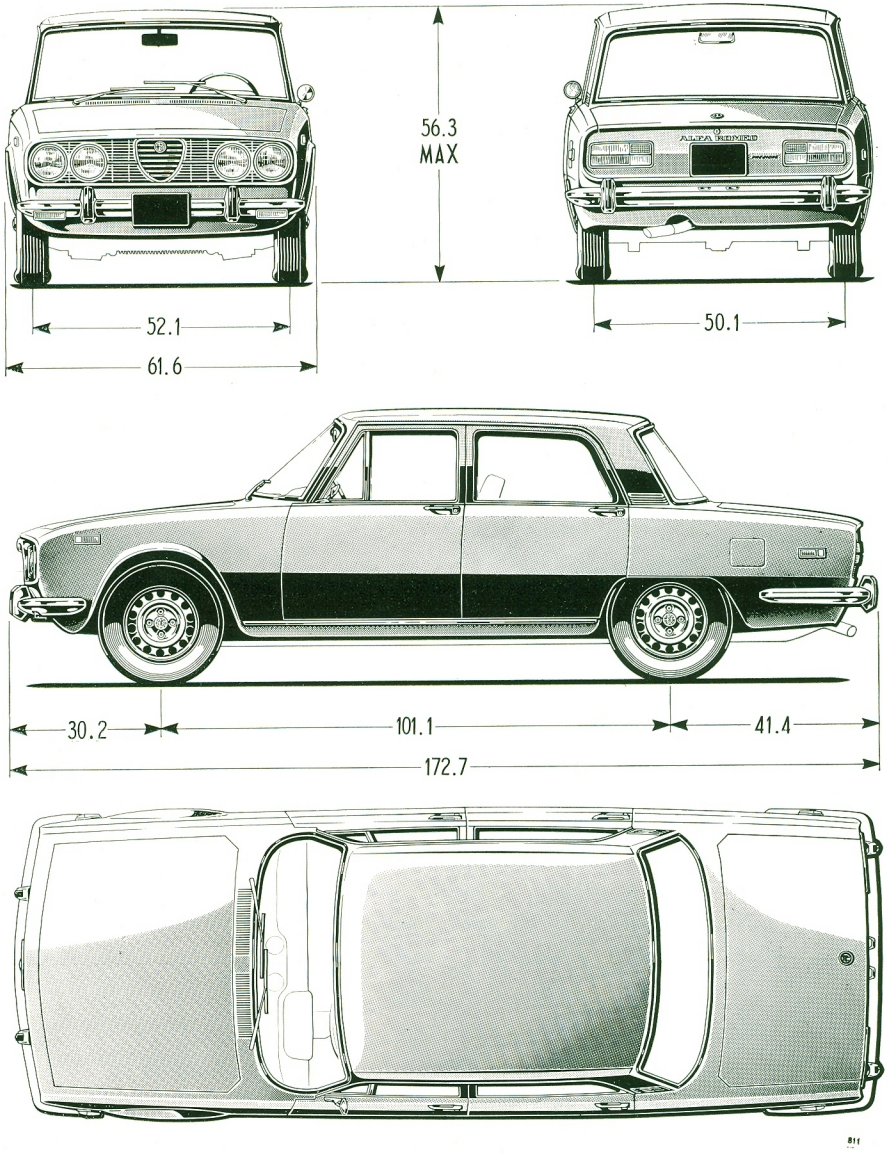

Dimensions in inches - overall height with unladen car

Alfawiki.nl

Specification

Engine

Number and layout of cylinders	4 in line
Bore and stroke	84 x 88.5 mm
Total displacement	1962 cc
BHP @ 5800 rpm	* 129 SAE net

* This is a new power rating measured with a new procedure which should not be compared with previous power ratings.

Chassis

Turning circle	34.8 ft
Designated seating capacity	2
Tires	165 HR 14
Curb weight	2292 lbs

Coolant

	IMP.	U.S.A.	METRIC
Alfa Romeo coolant mixture abt.	2.1 gals	2.5 gals	9,7 l

OIL

	IMP.	U.S.A.	METRIC
Engine ★ when full abt.	5.95 qts	7.1 qts	6,6 l
Engine danger level »	3.95 qts	4.75 qts	4,4 l
Transmission »	3.2 pts	3.8 pts	1,85 l
Differential »	2.5 pts	3.0 pts	1,4 l
Steering box »	.7 pt	.8 pt	0,4 l
★ This quantity is that needed for regular changing. The total amount of oil in the circuit (pan, filter and passages) is abt.	6.5 qts	7.8 qts	7,16 l

Fuel

	IMP.	U.S.A.	METRIC
Tank capacity abt.	11.9 gals	14.3 gals	54 l
Reserve »	1.3-1.5 gals	1.6-1.8 gals	6-7 l
Lead content (maximum) »	2.9 g/gals	2.4 g/gals	0,635 g/l

Octane requirement

IMPORTANT

Use of the correct fuel cannot be overemphasized. Recent changes in "Octane Ratings" can cause confusion. Below are the octane numbers required for your engine:

— Research method (RON)	91 minimum
— F.T.C. method ★	87 minimum

★ This rating number is required by the Federal Trade Commission to be posted on gasoline pumps in filling stations after March 15, 1972. While it is not an actual measure of an engine's requirement, its purpose is to approximate the actual octane requirement on the road.

PERFORMANCE with 41 : 9 final drive

AFTER BREAKING IN
maximum speeds

GEAR	1st	2nd	3rd	4th	5th	Rev.
mph.	27	45	66	88	118	29

The performances given are related to the use of the vehicle in average travelling conditions.

Alfawiki.nl

2000 GT VELOCE®

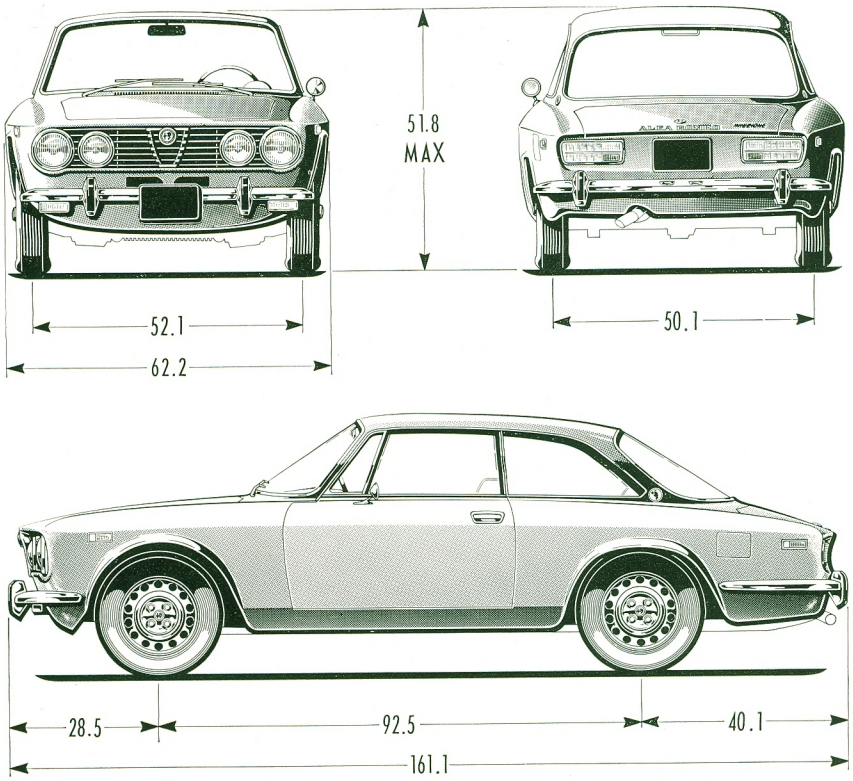

Dimensions in inches - overall height with unladen car.

Alfawiki.nl

Specification

Engine

Number and layout of cylinders	4 in line
Bore and stroke	84 x 88.5 mm
Total displacement	1962 cc
BHP @ 5800 rpm	* 129 SAE net

* This is a new power rating measured with a new procedure which should not be compared with previous power ratings.

Chassis

Turning circle	34.5 ft
Designated seating capacity	2
Tires	165 HR 14
Curb weight	2292 lbs

Coolant

	IMP.	U.S.A.	METRIC
Alfa Romeo coolant mixture abt.	2.1 gals	2.5 gals	9,7 l

OIL

	IMP.	U.S.A.	METRIC
Engine ★ when full abt.	5.95 qts	7.1 qts	6,6 l
Engine danger level »	3.95 qts	4.75 qts	4,4 l
Transmission »	3.2 pts	3.8 pts	1,85 l
Differential »	2.5 pts	3.0 pts	1,4 l
Steering box »	.7 pt	.8 pt	0,4 l
★ This quantity is that needed for regular changing. The total amount of oil in the circuit (pan, filter and passages) is abt.	6.5 qts	7.8 qts	7,16 l

Fuel

	IMP.	U.S.A.	METRIC
Tank capacity abt.	11.9 gals	14.3 gals	54 l
Reserve »	1.3-1.5 gals	1.6-1.8 gals	6-7 l
Lead content (maximum) »	2.9 g/gals	2.4 g/gals	0,635 g/l

Octane requirement

IMPORTANT

Use of the correct fuel cannot be overemphasized. Recent changes in "Octane Ratings" can cause confusion. Below are the octane numbers required for your engine:

— Research method (RON)	91 minimum
— F.T.C. method ★	87 minimum

★ This rating number is required by the Federal Trade Commission to be posted on gasoline pumps in filling stations after March 15, 1972. While it is not an actual measure of an engine's requirement, its purpose is to approximate the actual octane requirement on the road.

PERFORMANCE with 41 : 9 final drive

AFTER BREAKING IN
maximum speeds

GEAR	1st	2nd	3rd	4th	5th	Rev.
mph.	27	45	66	88	118	29

The performances given are related to the use of the vehicle in average travelling conditions.

Alfawiki.nl

2000 SPIDER VELOCE®

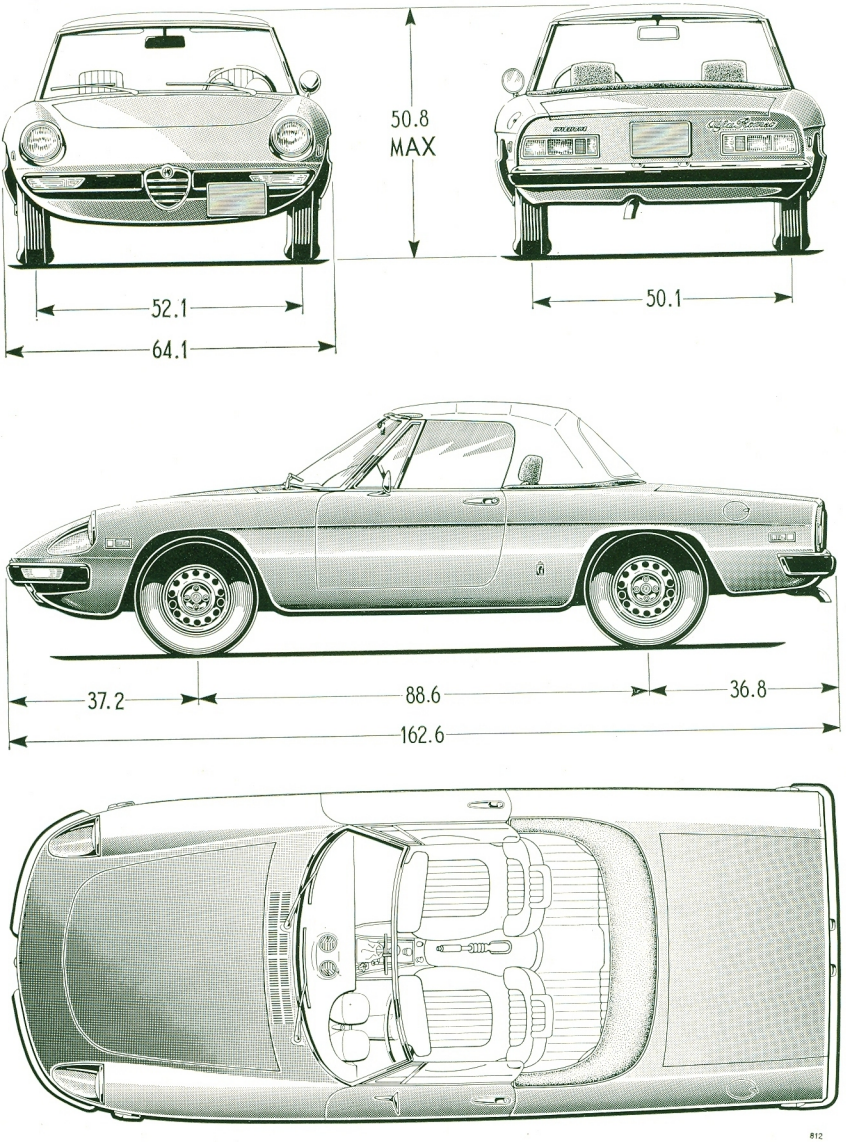

Dimensions in inches - overall height with unladen car.

Alfawiki.nl

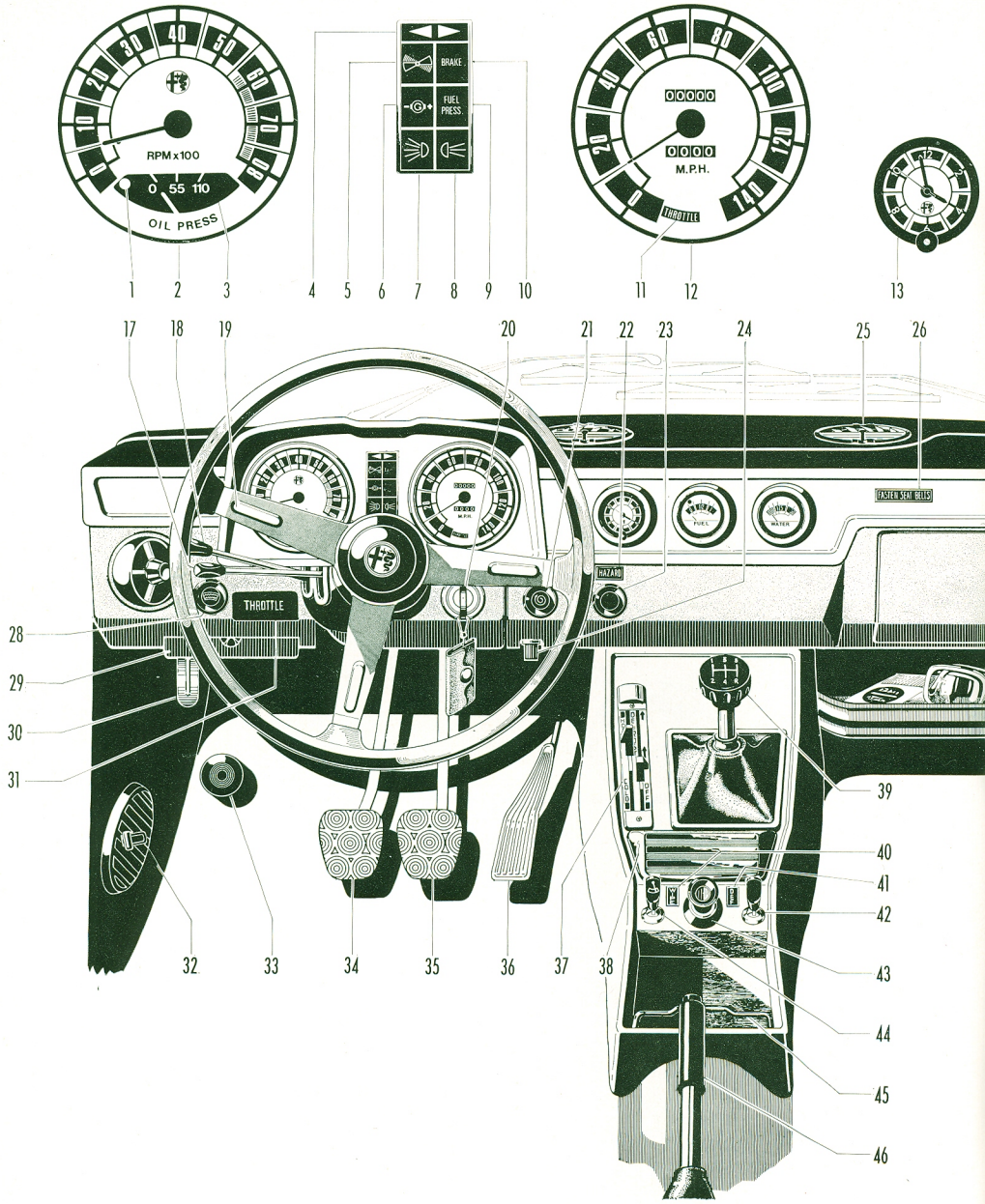

To engage the REVERSE merely shift the lever from neutral (F) as shown.

Alfawiki.nl

Controls and instruments

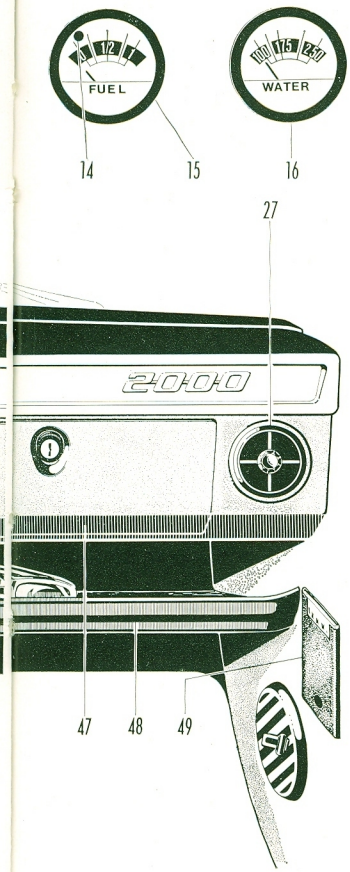

Instruments

1 Low oil pressure warning light.
2 Tachometer
3 Oil pressure gage
4 Warning light for direction indicators
5 Heater blower warning light (glows brighter when blower operates on high speed)
6 Alternator warning light
7 Headlamp high beam warning light
8 Parking light warning
9 Low fuel pressure warning light
10 Warning light for service brake pressure, fluid level and parking brake
11 Hand throttle warning light
12 Speedometer
13 Electric clock
14 Fuel reserve warning light
15 Fuel level indicator
16 Coolant temperature indicator
22 « Hazard » light (operates when parking lights are on)
26 « Fasten seat belts » light (this light and a buzzer, too, come on when a gear is engaged and until safety belts are worn)
29 Fusebox (at its left there is an additional fuse holder with a fuse for the fuel pump and a spare fuse)
40 « Wipe » light (operates when parking lights are on)
41 « Def » light (operates when parking lights are on)

Controls

17 Direction indicator switch
18 Headlamp, dimmer and flashing switch
19 Horn
20 Ignition switch, antitheft & buzzer
21 Dimmer for HAZARD-WIPE-DEF lights and heater control panel light
23 Emergency flasher push button switch with built in warning light
24 Tripmeter reset knob
28 Electrically-heated rear window switch with built in warning light
30 Hood release
31 Hand throttle
33 Windshield washer: when the control is pressed the windshield wiper also comes into action
34 Clutch
35 Brake
36 Accelerator
37 Heating, ventilating and demisting (control panel lit when parking lights are on)
39 Gearshift lever
42 Blower switch (two-speed)
44 Windshield wiper switch (two-speed)
46 Hand brake (for emergency and parking)

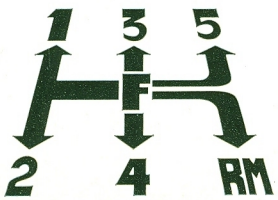

Luxury fittings

27 Ram air vents
25 Windshield demisting outlet
32 Ventilating air outlet
38 Ash tray (removable)
43 Cigarette lighter: insert a cigarette then push the knob in: this brings into operation an electric element which lights the cigarette
45 Holder
47 Glove compartment (on opening, a light inside it comes on)
48 Parcel shelf
49 Pocket for coupon book

Alfawiki.nl

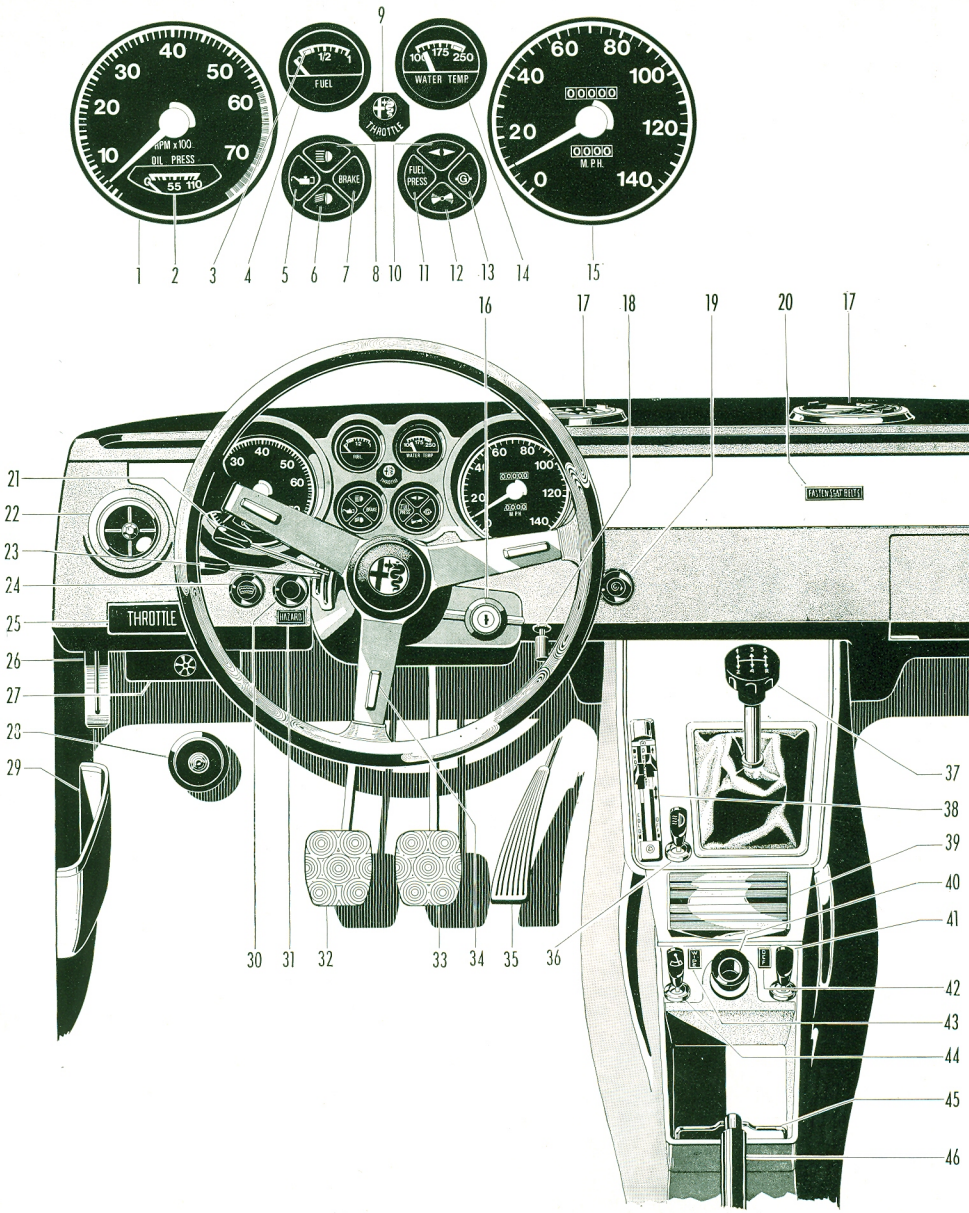

To engage the REVERSE merely shift the lever from neutral (F) as shown.

Alfawiki.nl

Controls and instruments

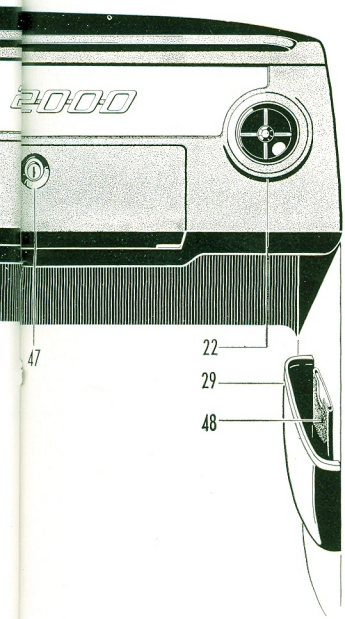

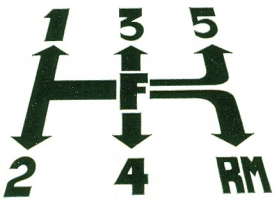

Instruments

1 Tachometer
2 Oil pressure gage
3 Fuel reserve warning light
4 Fuel level indicator
5 Low oil pressure warning light
6 Parking light warning
7 Warning light for service brake pressure, fluid level and parking brake
8 Headlamp high beam warning light
9 Hand throttle warning light
10 Warning light for direction indicators
11 Low fuel pressure warning light
12 Heater blower warning light (glows brighter when blower operates on high speed)
13 Alternator warning light
14 Coolant temperature indicator
15 Speedometer
20 « Fasten seat belts » light (this light and a buzzer, too, come on when a gear is engaged and until safety belts are worn)
27 Fusebox (at its left there is an additional fuse holder with a fuse for the fuel pump and another fuse for fog lamps)
31 « HAZARD » light (operates when parking lights are on)
42 « DEF » light (operates when parking lights are on)
43 « WIPE » light (operates when parking lights are on)

Controls

16 Ignition switch, antitheft & buzzer
18 Tripmeter reset knob
19 Dimmer for HAZARD-WIPE-DEF lights and heater control panel light
21 Direction indicator switch
23 Headlamp, dimmer & flashing switch
24 Electrically-heated rear window switch with built-in warning light
25 Hand throttle
26 Hood release
28 Windshield washer: when the control is pressed the windshield wiper also comes into action
30 Emergency flasher push button switch with built-in warning light
32 Clutch
33 Brake
34 Horn
35 Accelerator
36 Fog lamp switch
37 Gearshift lever
38 Heating, ventilating and demisting (control panel lit when parking lights are on)
41 Blower switch (two speed)
44 Windshield wiper switch (two speed)
46 Hand brake (for emergency and parking)

Luxury fittings

17 Windshield demisting outlets
22 Ram air vents
29 Pocket for documents & literature
39 Ash tray (removable)
40 Cigarette lighter: insert a cigarette, then push the knob in: this brings into operation an electric element which lights the cigarette
45 Holder
47 Glove compartment (on opening, a light inside it comes on)
48 Pocket for Coupon Book

Alfawiki.nl

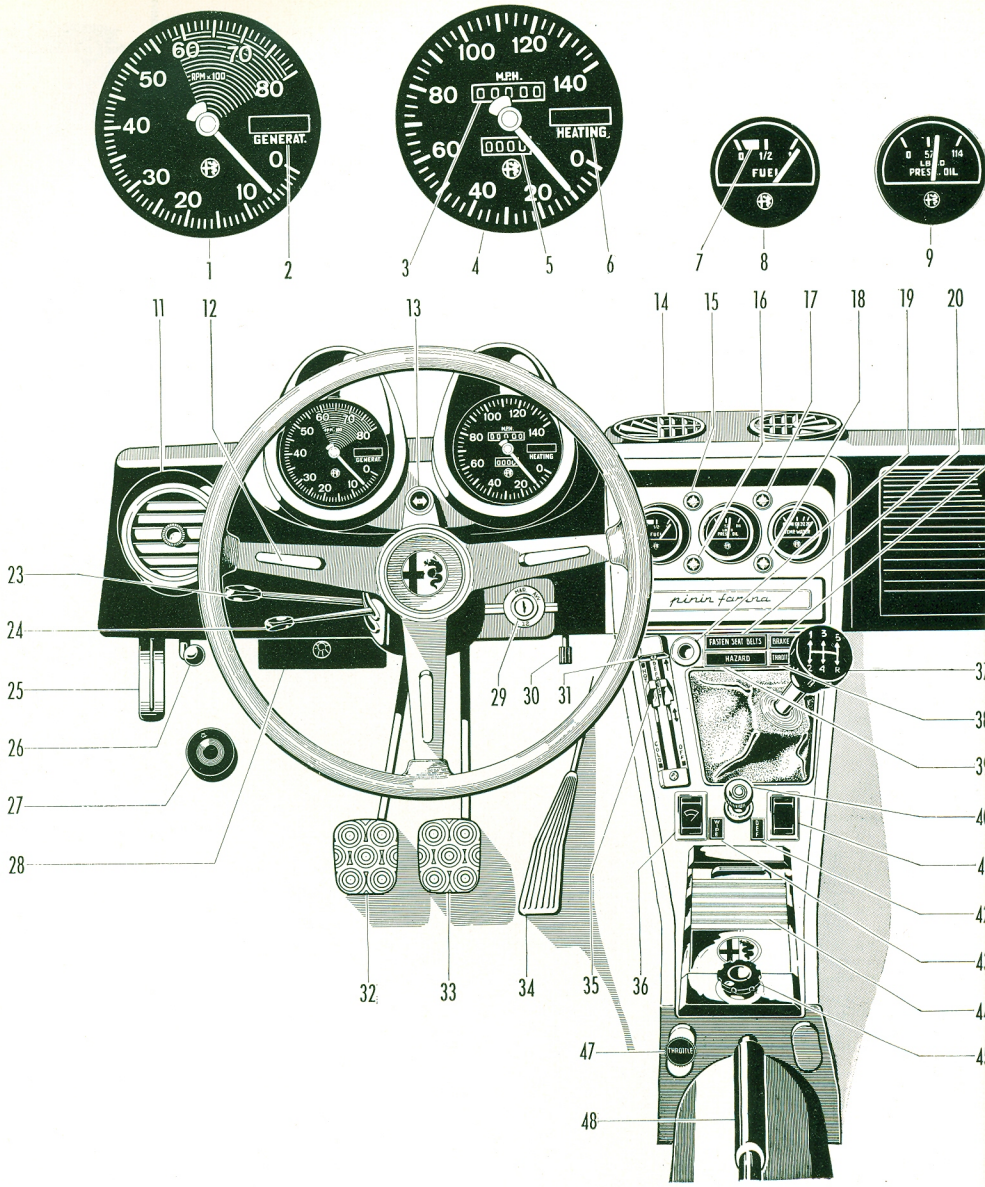

To engage the REVERSE merely shift the lever from neutral (F) as shown.

Alfawiki.nl

Controls and instruments

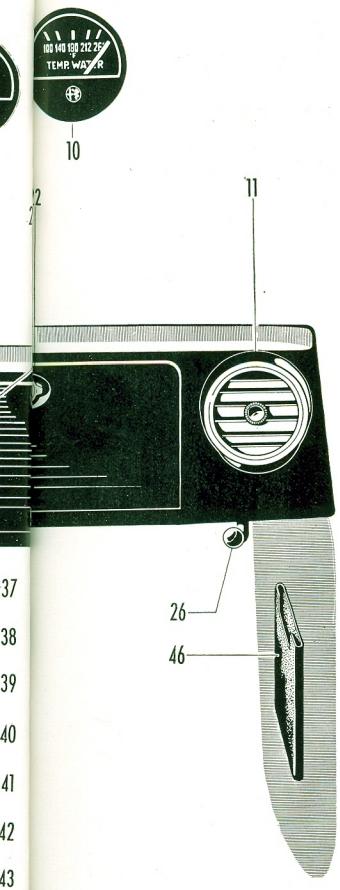

Instruments

1 Tachometer
2 Alternator warning light
3 Odometer
4 Speedometer
5 Tripmeter
6 Heater blower warning light (glows brighter when blower operates on high speed)
7 Fuel reserve warning light
8 Fuel lever indicator
9 Oil pressure gage
10 Coolant temperature indicator
13 Direction indicator warning light
15 Low fuel pressure warning light
16 Parking light warning
17 Low oil pressure warning light
18 Headlamp high beam warning light
20 « Fasten seat belts » light (this light and a buzzer, too, come on when a gear is engaged and until safety belts are worn)
21 Warning light for service brake pressure, fluid level and parking brake
28 Fusebox (at its left there is an additional fuse holder with a fuse for the fuel pump and a spare fuse)
31 Heater control panel light (operates when parking lights are on)
38 Throttle warning light
39 « Hazard » light (operates when parking lights are on)
42 « Def » light (operates when parking lights are on)
43 « Wipe » light (operates when parking lights are on)

Controls

12 Horn
19 Emergency flasher push button switch with built in warning light
23 Headlamp, dimmer & flashing switch
24 Direction indicator switch
25 Hood release
27 Windshield washer: when the controls is pressed the windshield wiper also comes into action
29 Ignition switch, antitheft & buzzer
30 Tripmeter reset knob
32 Clutch
33 Brake
34 Accelerator
35 Heating, ventilating and demisting (control panel lit when parking lights are on)
36 Windshield wiper switch (tow-speed)
37 Gearshift lever
40 Dimmer for HAZARD-WIPE-DEF lights and heater control panel light
41 Blower switch (two-speed)
47 Hand throttle
48 Hand brake (for emergency and parking)

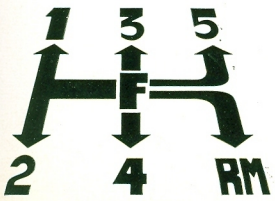

Luxury fittings

11 Ventilating air outlet
14 Windshield demisting outlet
22 Glove compartment (with interior lighting that comes on when lid is opened)
26 Side outlet lever
44 Ash tray (removable)
45 Cigarette lighter: insert a cigarette, then push the knob in: this brings into operation an electric element which lights the cigarette
46 Pocket for Coupon Book

Alfawiki.nl

CONSUMER INFORMATION

Acceleration and passing ability

DESCRIPTION OF VEHICLES TO WHICH THIS TABLE APPLIES:

2000 BERLINA

This figure indicates passing times and distances that can be met or exceeded by the vehicles to which it applies, in the situations diagrammed below.

The low-speed pass assumes an initial speed of **20** mph and a limiting speed of **35** mph. The high-speed pass assumes an initial speed of **50** mph and a limiting speed of **80** mph.

Notice: the information presented represents results obtainable by skilled drivers under controlled road and vehicle conditions, and the information may not be correct under other conditions.

Summary table: Low speed pass **390** feet; **8.2** seconds
High-speed pass **1130** feet; **11.7** seconds

LOW SPEED

Initial speed: **20 mph** Limiting speed: **35 mph**

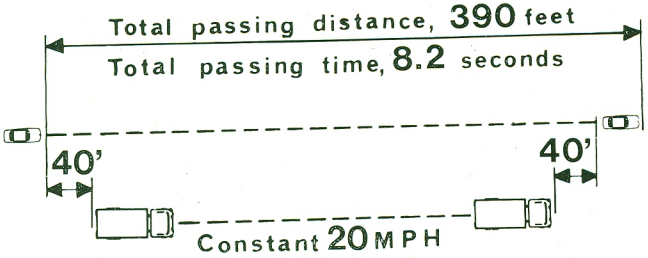

55' Truck

HIGH SPEED

Initial speed: **50 mph** Limiting speed: **80 mph**

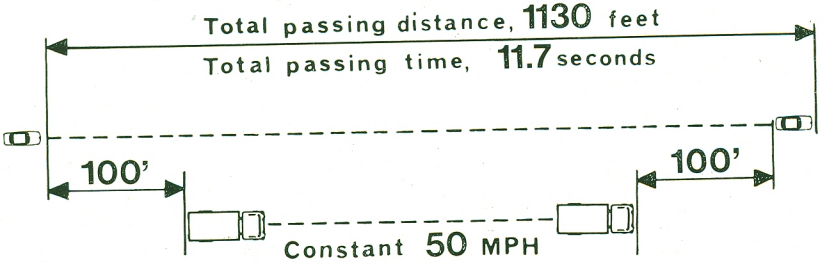

55' Truck

Alfawiki.nl

Alfa Romeo

CONSUMER INFORMATION

Acceleration and passing ability

Vehicle stopping distance

Tire reserve load

2000 BERLINA

Alfawiki.nl

presented represents results obtainable by skilled
ntrolled road and vehicle conditions, and the informa-
correct under other conditions.

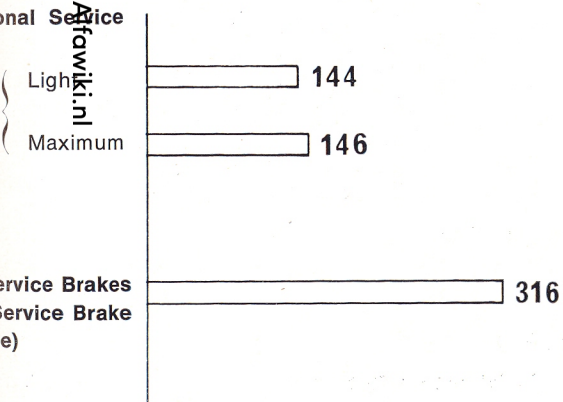

Alfawiki.nl

by each vehicle to which the table applies.

Recommended tire size designations		165 HR 14	
		Pirelli Firestone Continental Ceat Michelin	Kléber
Recommended cold inflation pressure for maximum loaded vehicle weight (psi)	Front	**24**	**24**
	Rear	**26**	**29**
Tire reserve load percentage (1)		**14.5**	**15.4**

(1) The difference expressed as a percentage of tire load rating, between (a) the load rating of a tire at the vehicle manufacturer's recommended inflation pressure at the maximum loaded vehicle weight and (b) the load imposed upon the tire by the vehicle at that condition.

CONSUMER INFORMATION
Vehicle stopping distance

DESCRIPTION OF VEHICLES TO WHICH THIS TABLE APPLIES:
2000 BERLINA

This figure indicates braking performance that can be met or exceeded by the vehicles to which it applies, without locking the wheels, under different conditions of loading and with partial failures of the braking system.

The information presented represents results obtainable by skilled drivers under controlled road and vehicle conditions, and the information may not be correct under other conditions.

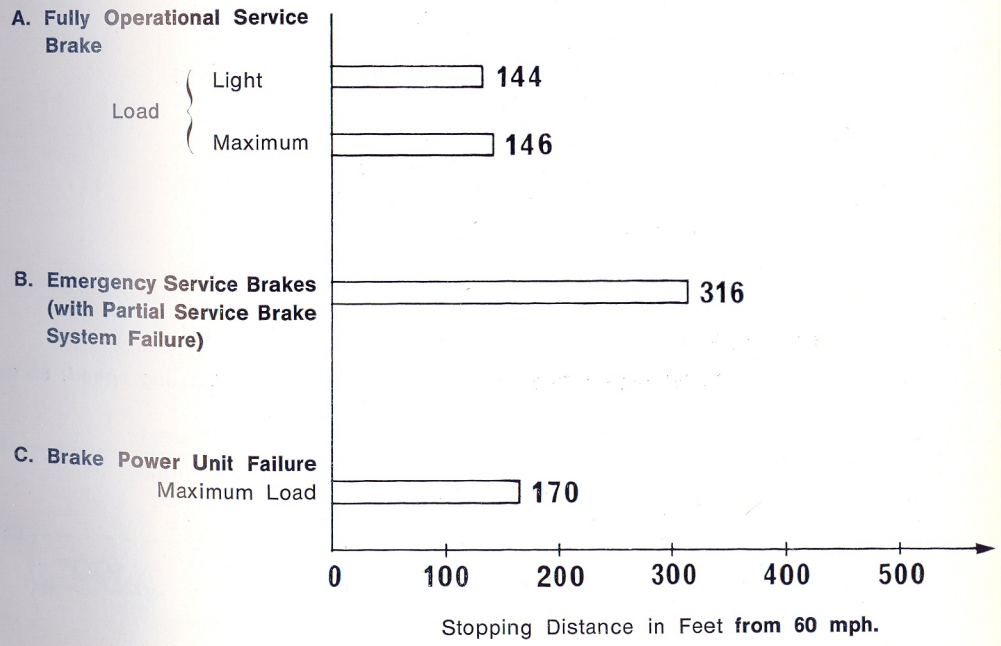

Alfawiki.nl

CONSUMER INFORMATION
Tire reserve load

DESCRIPTION OF VEHICLES TO WHICH THIS TABLE APPLIES: 2000 BERLINA

This tables lists the Tire Size Designations recommended by the manufacturer for use on the vehicles to which it applies, with the recommended inflation pressure for maximum loading and the tire reserve load percentage for each of the tires listed. The tire reserve load percentage indicated is met or exceeded by each vehicle to which the table applies.

		165 HR 14	
Recommended tire size designations		Pirelli Firestone Continental Ceat Michelin	Kléber
Recommended cold inflation pressure for maximum loaded vehicle weight (psi)	Front	**24**	**24**
	Rear	**26**	**29**
Tire reserve load percentage (1)		**14.5**	**15.4**

(1) The difference expressed as a percentage of tire load rating, between (a) the load rating of a tire at the vehicle manufacturer's recommended inflation pressure at the maximum loaded vehicle weight and (b) the load imposed upon the tire by the vehicle at that condition.

WARNING - Failure to maintain the recommended tire inflation pressure or increase tire pressure as recommended when operating at maximum loaded vehicle weight, or loading the vehicle beyond the capacities specified on the tire placard affixed to the vehicle, may result in unsafe operating conditions due to premature tire failure, unfavorable handling characteristics, and excessive tire wear. The tire reserve load percentage is a measure of tire capacity not of vehicle capacity. Loading beyond the specified vehicle capacity may result in failure of other vehicle components.

CONSUMER INFORMATION

Acceleration and passing ability

DESCRIPTION OF VEHICLES TO WHICH THIS TABLE APPLIES:

2000 G.T. VELOCE

This figure indicates passing times and distances that can be met or exceeded by the vehicles to which it applies, in the situations diagrammed below.

The low-speed pass assumes an initial speed of **20** mph and a limiting speed of **35** mph. The high-speed pass assumes an initial speed of **50** mph and a limiting speed of **80** mph.

Notice: the information presented represents results obtainable by skilled drivers under controlled road and vehicle conditions, and the information may not be correct under other conditions.

Summary table: Low-speed pass **384** feet; **8.0** seconds
High-speed pass **1105** feet; **11.4** seconds

LOW SPEED

Initial speed: **20 mph** Limiting speed: **35 mph**

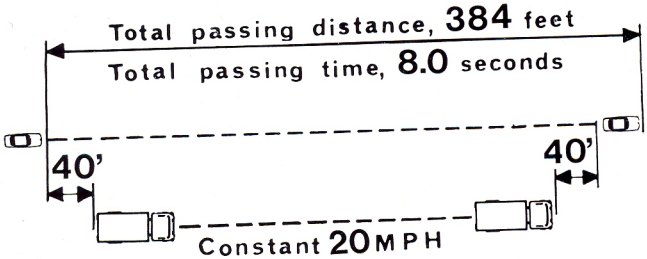

55' Truck

HIGH SPEED

Initial speed: **50 mph** Limiting speed: **80 mph**

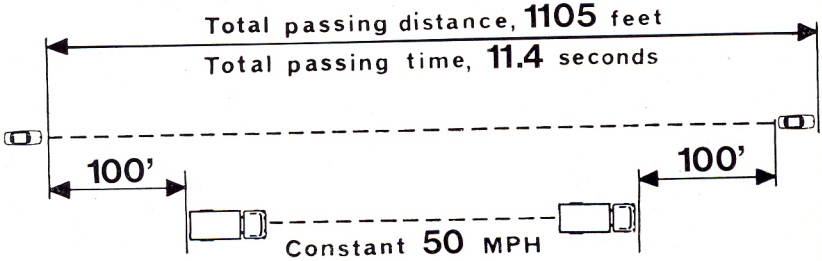

55' Truck

Alfawiki.nl

Alfa Romeo

CONSUMER INFORMATION

Acceleration and passing ability

Vehicle stopping distance

Tire reserve load

2000 GT VELOCE®

Alfawiki.nl

CONSUMER INFORMATION
Vehicle stopping distance

DESCRIPTION OF VEHICLES TO WHICH THIS TABLE APPLIES:
2000 G.T. VELOCE

This figure indicates braking performance that can be met or exceeded by the vehicles to which it applies, without locking the wheels, under different conditions of loading and with partial failures of the braking system.

The information presented represents results obtainable by skilled drivers under controlled road and vehicle conditions, and the information may not be correct under other conditions.

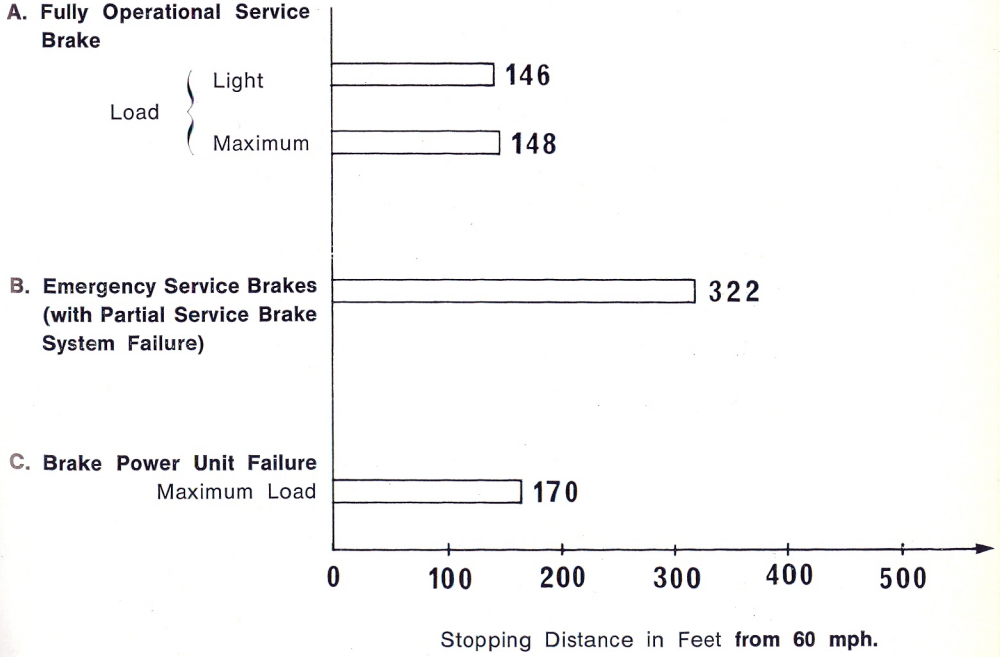

Alfawiki.nl

CONSUMER INFORMATION
Tire reserve load

DESCRIPTION OF VEHICLES TO WHICH THIS TABLE APPLIES: 2000 G.T. VELOCE

This table lists the Tire Size Designations recommended by the manufacturer for use on the vehicles to which it applies, with the recommended inflation pressure for maximum loading and the tire reserve load percentage for each of the tires listed. The tire reserve load percentage indicated is met or exceeded by each vehicle to which the table applies.

		165 HR 14		
Recommended tire size designations		Pirelli Firestone Continental Ceat	Michelin	Kléber
Recommended cold inflation pressure for maximum loaded vehicle weight (psi)	Front	24	21	24
	Rear	26	26	29
Tire reserve load percentage (1)		22.7	17.7	24.2

(1) The difference expressed as a percentage of tire load rating, between (a) the load rating of a tire at the vehicle manufacturer's recommended inflation pressure at the maximum loaded vehicle weight and (b) the load imposed upon the tire by the vehicle at that condition.

WARNING - Failure to maintain the recommended tire inflation pressure or increase tire pressure as recommended when operating at maximum loaded vehicle weight, or loading the vehicle beyond the capacities specified on the tire placard affixed to the vehicle, may result in unsafe operating conditions due to premature tire failure, unfavorable handling characteristics, and excessive tire wear. The tire reserve load percentage is a measure of tire capacity not of vehicle capacity. Loading beyond the specified vehicle capacity may result in failure of other vehicle components.

CONSUMER INFORMATION

Acceleration and passing ability

DESCRIPTION OF VEHICLES TO WHICH THIS TABLE APPLIES:

2000 SPIDER VELOCE

This figure indicates passing times and distances that can be met or exceeded by the vehicles to which it applies, in the situations diagrammed below.

The low-speed pass assumes an initial speed of **20** mph and a limiting speed of **35** mph. The high-speed pass assumes an initial speed of **50** mph and a limiting speed of **80** mph.

Notice: the information presented represents results obtainable by skilled drivers under controlled road and vehicle conditions, and the information may not be correct under other conditions.

Summary table: Low-speed pass **380** feet; **7.9** seconds
High-speed pass **1075** feet; **11.0** seconds

LOW SPEED

Initial speed: **20 mph** Limiting speed: **35 mph**

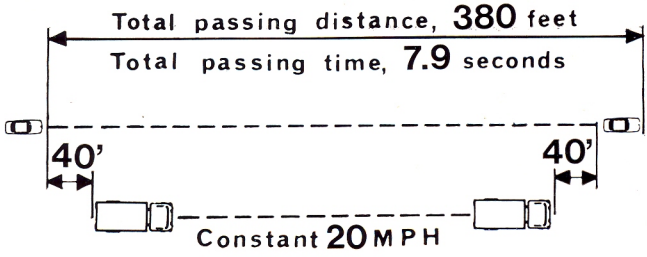

55' Truck

HIGH SPEED

Initial speed: **50 mph** Limiting speed: **80 mph**

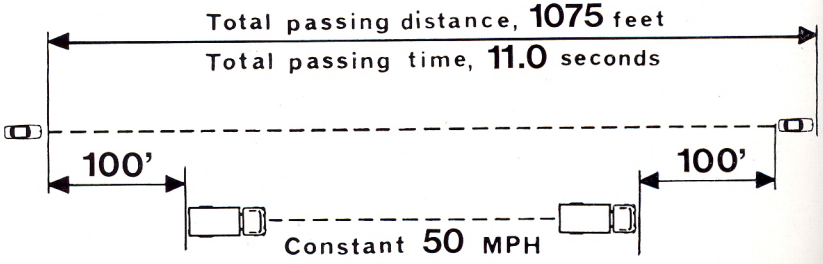

55' Truck

Alfawiki.nl

DESCRIPTION OF
20

This figure indicates b
by the vehicles to whi
different conditions of
system.

The information pres
drivers under controlle
tion may not be corre

A. Fully Operational S
Brake

Load { Lig / Ma

B. Emergency Service
(with Partial Service
System Failure)

C. Brake Power Unit
Maximum

Alfa Romeo

CONSUMER INFORMATION

Acceleration and passing ability

Vehicle stopping distance

Tire reserve load

2000
SPIDER VELOCE®

Alfawiki.nl

Alfa Romeo

CONSUMER INFORMATION

Acceleration and passing ability

Vehicle stopping distance

Tire reserve load

2000 SPIDER VELOCE®

Alfawiki.nl

cates braking performance that can be met or exceeded
to which it applies, without locking the wheels, under
ions of loading and with partial failures of the braking

n presented represents results obtainable by skilled
ontrolled road and vehicle conditions, and the informa-
e correct under other conditions.

Alfawiki.nl

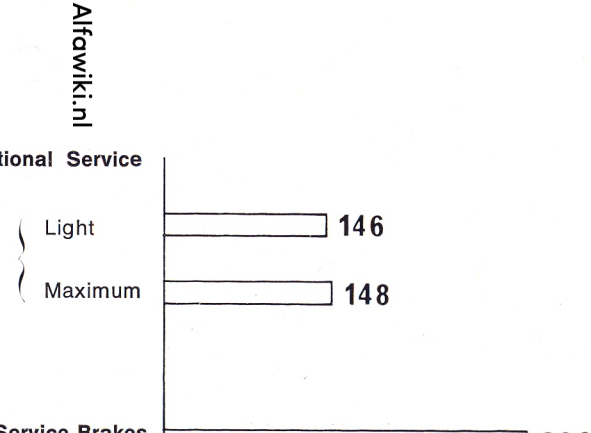

This table lists the Tire Size Designations recommended by the manufacturer for use on the vehicles to which it applies, with the recommended inflation pressure for maximum loading and the tire reserve load percentage for each of the tires listed. The tire reserve load percentage indicated is met or exceeded by each vehicle to which the table applies.

Recommended tire size designations		165 HR 14		
		Pirelli Firestone Continental Ceat	Michelin	Kléber
Recommended cold inflation pressure for maximum loaded vehicle weight (psi)	Front	**24**	**21**	**24**
	Rear	**26**	**26**	**29**
Tire reserve load percentage (1)		**27.1**	**26.4**	**31.2**

(1) The difference expressed as a percentage of tire load rating,

CONSUMER INFORMATION
Vehicle stopping distance

DESCRIPTION OF VEHICLES TO WHICH THIS TABLE APPLIES:
2000 SPIDER VELOCE

This figure indicates braking performance that can be met or exceeded by the vehicles to which it applies, without locking the wheels, under different conditions of loading and with partial failures of the braking system.

The information presented represents results obtainable by skilled drivers under controlled road and vehicle conditions, and the information may not be correct under other conditions.

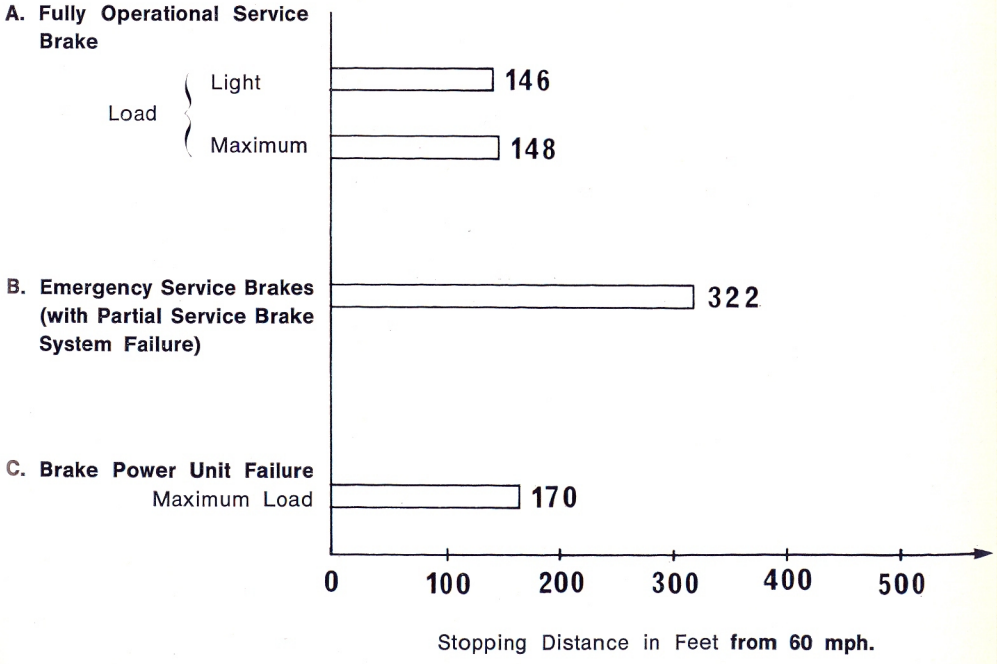

Alfawiki.nl

CONSUMER INFORMATION
Tire reserve load

DESCRIPTION OF VEHICLES TO WHICH THIS TABLE APPLIES: 2000 SPIDER VELOCE

This table lists the Tire Size Designations recommended by the manufacturer for use on the vehicles to which it applies, with the recommended inflation pressure for maximum loading and the tire reserve load percentage for each of the tires listed. The tire reserve load percentage indicated is met or exceeded by each vehicle to which the table applies.

Recommended tire size designations		165 HR 14		
		Pirelli Firestone Continental Ceat	Michelin	Kléber
Recommended cold inflation pressure for maximum loaded vehicle weight (psi)	Front	**24**	**21**	**24**
	Rear	**26**	**26**	**29**
Tire reserve load percentage (1)		**27.1**	**26.4**	**31.2**

(1) The difference expressed as a percentage of tire load rating, between (a) the load rating of a tire at the vehicle manufacturer's recommended inflation pressure at the maximum loaded vehicle weight and (b) the load imposed upon the tire by the vehicle at that condition.

WARNING - Failure to maintain the recommended tire inflation pressure or increase tire pressure as recommended when operating at maximum loaded vehicle weight, or loading the vehicle beyond the capacities specified on the tire placard affixed to the vehicle, may result in unsafe operating conditions due to premature tire failure, unfavorable handling characteristics, and excessive tire wear. The tire reserve load percentage is a measure of tire capacity not of vehicle capacity. Loading beyond the specified vehicle capacity may result in failure of other vehicle components.

WARNING FOR THE FIRST 1900 miles

BREAKING IN

To allow the various parts of the car, **particularly the engine, transmi sion and differential,** to settle in gradually, a breaking in period necessary, during which maximum performance must not be demand of the car.

RECOMMENDATIONS FOR THE FIRST 1900 MILES

Mileage	Max r.p.m.
Up to **600**	**3500**
601 to **1900**	**4500**

Cold starting:

— before driving, run engine at approx. 1500 rpm for at least 3 minutes in summer and 5 minutes in winter.

While driving:

— do not drive at max. recommended speeds for long periods;
— never fully depress the accelerator pedal;
— now and then release the accelerator pedal;
— avoid full and extended braking during the first 600 miles.

DURING BREAKING-IN STRICTLY FOLLOW THE ABOVE DIRECTION

Note: The same recommendations apply also in the case of engine reconditioni involving replacement of cylinder barrels, pistons, piston rings and bearings.

FREE SERVICE COUPONS

COUPON A At the first **500-750 mi.**

COUPON B At the first **3000-3750 mi.**

carry out the free servicing included coupons

Alfawiki.nl

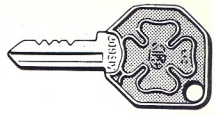

Starting the engine

Make certain the gearshift lever is in neutral

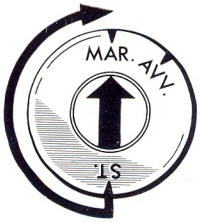

Insert the key in the ignition switch and turn it clockwise to the MAR. position (ignition « on ») make sure the low fuel pressure warning light goes off after having flashed on.

Wait a few moments and then turn the ignition key further clockwise to AVV. to operate the starter.

As soon as the engine fires release the key.
If the engine fails to start, the key must be returned to **STOP** and the operation repeated.

For fuel warning light location:

Berlina see 9 on page 13
GT Veloce see 11 on page 15
Spider Veloce see 15 on page 17

Note

If the warning light does not flash on or stays on, this is an indication of failure of the indicating device or fuel feed system; therefore have them checked as soon as possible by an authorized Alfa Romeo Dealer.
When opening driver's door, **a suitable buzzer will alert you,** if the key has been left in the ignition switch.

Stopping the engine

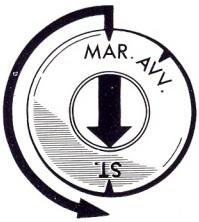

Return the key counterclockwise to STOP. In such a position the ignition is « off ». The key can be withdrawn only in STOP position.
When the key is withdrawn, it is no longer possible to rotate the steering wheel.

Antitheft/steering lock

By withdrawing the key (when in STOP position and steering wheel spokes balanced for straight ahead direction), the steering is locked; to release the lock easier slightly rotate the wheel in both directions.
Never withdraw the key before the car has come to a complete stop as the « steering lock » condition may occur.
MAR. = ignition; AVV. = starting; ST. = engine stop and steering lock.

Alfawiki.pl

From cold

Particularly when starting from cold in winter, it is advisable, in orde to facilitate starting, to press the clutch pedal down fully.

Automatic devices, besides doing away with the conventional choke, fac ilitate the initial running of engine after a cold start, allow a faste warming up of the engine and improve driveability.

As an aid in starting from cold, depress, partially and progressivel the accelerator pedal. After a cold start and particularly when th ambient temperature is below freezing point, wait a fairly long tim before getting away so as to warm up properly all engine parts an allow the oil to reach all points requiring lubrication.

Top performance must never be demanded of the car until coolar temperature is about 158 °F.

When hot

When the engine is already hot or with very high ambient temperature (above 77 °F) slowly depress the accelerator pedal to facilitate startin

If the engine fails to start, look for the cause as follows:

- the battery charge may be too weak to rotate the starter sufficientl fast to start the engine;
- the ignition equipment may be defective (dirty plugs, oxidized contac breaker points, wet or cracked distributor cap, damaged distributo or coil);
- the solenoid-actuated cold start device may fail to operate;
- electric circuits may be broken or fuses blown.

Do not accelerate the engine until it has warmed up, since when th engine is cold the oil cannot reach all points requiring lubrication.

Make sure the oil pressure shown by the gage is as prescribed and th oil pressure warning light goes off as soon as the engine speed exceed idling.

Also make sure **the alternator warning light goes** off as engine spee exceeds idling.

Check that the low oil pressure warning light is off.

Alfawiki.pl

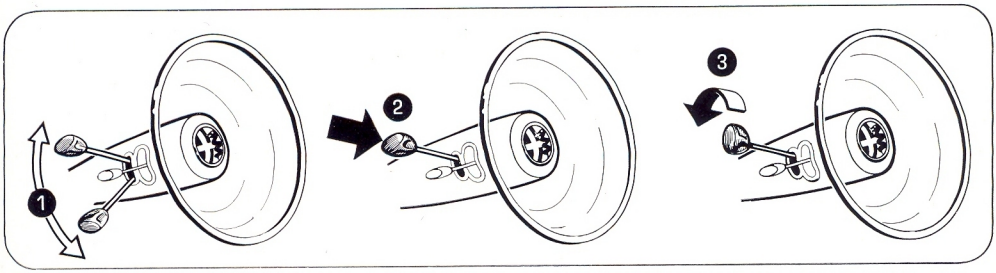

The switch lever may be in either of the two positions. The warning lights on the instrument panel are out.

1 Lights off

Press on the knob irrespective of the position of the switch.

2 Flashing

Irrespective of the position of the lever, turn the knob to the first notch. The instrument lights, the warning light on the instrument panel, the HAZARD, WIPE, DEF lights and the heater control panel light will come on. Flashing is still possible by pressing the knob.

3 Parking lights and license plate light

From position 3 turn the knob forward to the second notch.

If the lever is up, the **low beams** come on (no flashing).

If on the other hand, it is down, the **high beams** and the respective warning light come on (flashing possible).

The movement of the lever up and down allows the light to be **dimmed** or returned to **high beam.**

The lights are extinguished by turning the knob back over the notches.

1 Lights off

Alfawiki.nl

Emergency (road hazard) flashers

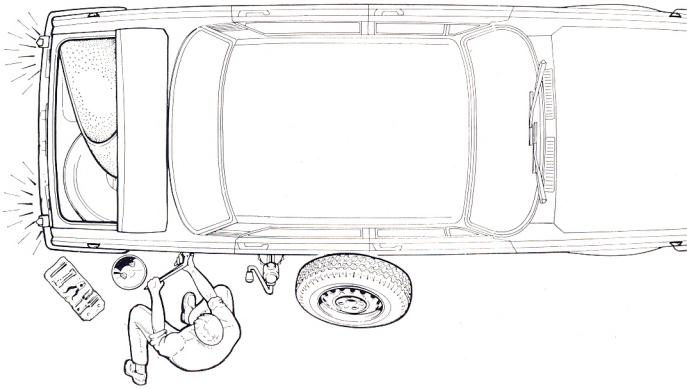

To operate the emergency flashers are wired independently from the switch, push the switch mounted instrument panel (Berlina and GT or on the console (Spider Veloce).

Fog lamps

The GT Veloce is provided with fog lamps as standard eq

The lamps are controlled by the switch on the console w parking lights are on.

Alfawiki.nl

While driving

Check the oil pressure gage from time to time and stop the engine if the pressure with a hot engine and at maximum revolutions should fall below limits shown on page 60.

Check the low oil pressure warning light: if on, it is an indication of a trouble in the lubricating system: in this case, stop the car and have the lubricating system checked by an authorized Dealer.
However, it is possible for the warning light to come on when the car is cornering: this may be caused by a low level of oil in the pan which can be easily remedied by topping up.

No trouble exists if the warning light comes on while the engine is idling, especially when hot.

Check that the low fuel pressure warning light on instrument panel is off; when on, it means that the feed system is developing troubles; therefore, have it checked by your Dealer.

Do not drive at high speed until the oil in the engine, transmission and differential has warmed up properly.

When shifting gears, take care to depress the clutch pedal fully; this will ensure smooth operation and save synchronizers from excessive wear. Do not rest your foot on clutch pedal when not actually using it.

While parking

Never leave the key in the **MAR.** position (ignition « on ») to prevent battery discharge and coil damage. Apply the hand brake and, when parking the car uphill or downhill, shift into a low gear and steer the front wheels in such a direction as to cause the car, should the parking brake disengage accidentally, to move toward the curb.

Alfawiki.nl

To keep a constant fuel/air ratio even when the ambient temperature varies as the seasons change, the average seasonal temperature compensator lever on the control unit shall be shifted to:

- mark **N** (normal) for ambient temperatures exceeding 59 °F.
- mark **C** (cold) for temperatures between 59 °F and 32 °F.
- mark **F** (freezing) for temperatures below 32 °F.

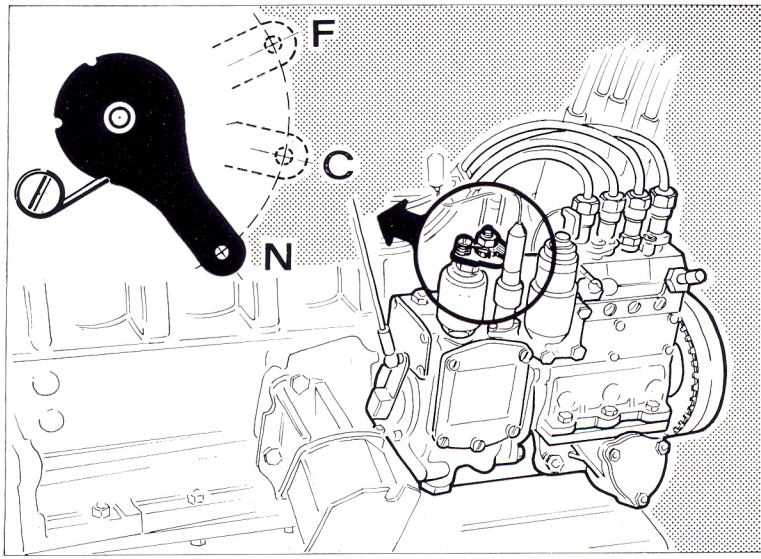

WARNING

Never tamper with the seal on the reference screw of control unit input lever.

Alfawiki.nl

Cooling circuit

The **Alfa Romeo coolant mixture** gives full protection against freezing down to — 22 °F.
In places where the temperature falls below — 22 °F, the antifreeze mixture can be made stronger by varying its concentration.

To this end, a certain amount of mixture should be drained off the circuit and replaced with the same quantity of **Alfa Romeo antifreeze** drawn from suitable containers available by **Alfa Romeo Dealers.**

The quantities of antifreeze to be added to radiator and reservoir depending on the lowest anticipated temperature are the following:

Temperature	Amount of **Alfa Romeo Coolant Mixture** to be replaced with an equal quantity of **Alfa Romeo Antifreeze.**		
°F	Radiator	Reservoir	Total
— 24	400 cc.	100 cc.	500 cc.
— 33	800 cc.	200 cc.	1,000 cc.
— 38	1,200 cc.	300 cc.	1,500 cc.

It is recommended that this operation should be entrusted to an authorized Dealer.

Alfawiki.nl

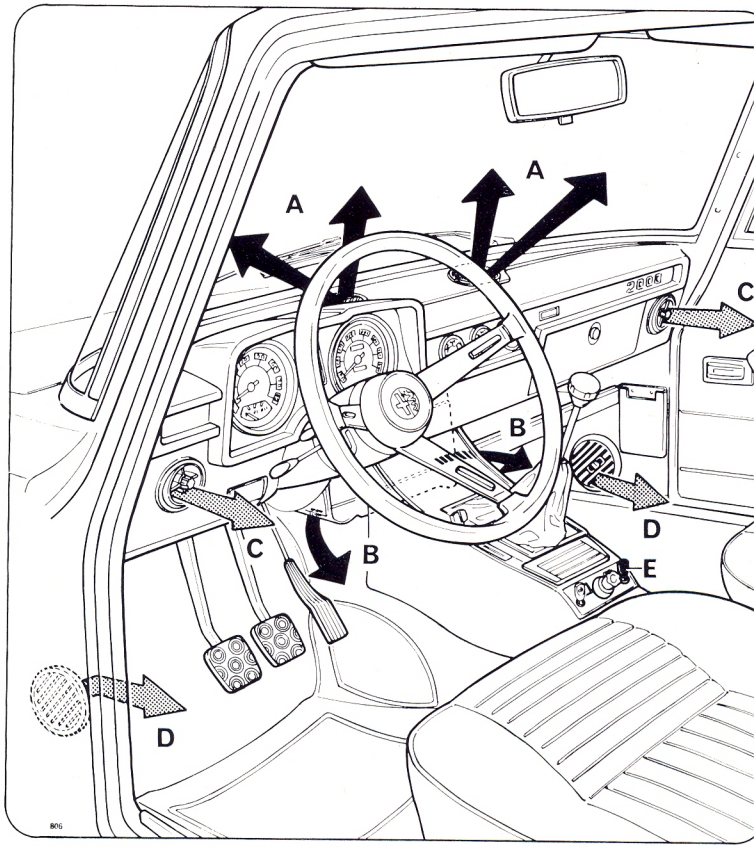

Location of controls and air outlets

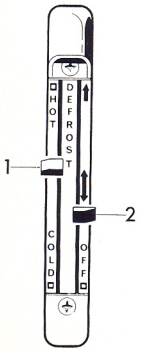

Air enters through:

- **A** for windshield demisting with warm and fresh air.
- **B** for ventilation and heating
- **C - D** for ram ventilation

Temperature and air flow

The air admitted to the car can be gradually heated by the upward movement of the lever **1** (operate this lever only when engine is warmed up). The movement of the lever **2** gradually regulates the flow of air through the openings **A** and **B.**

Two-speed electric blower

In order to produce a satisfactory flow of air into the car at low speeds, switch on the blower with the switch **E**. Warning light **F** indicates that this has been done.

Alfawiki.nl

The grilles **A** can be rotated by hand as desired.

The illustrations show some examples of grille positions.

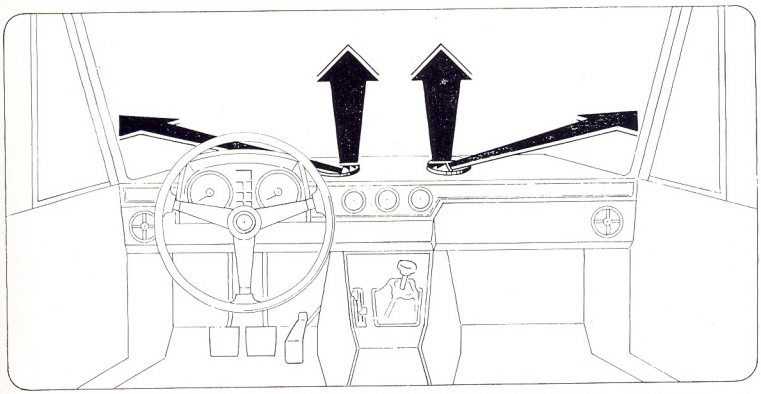

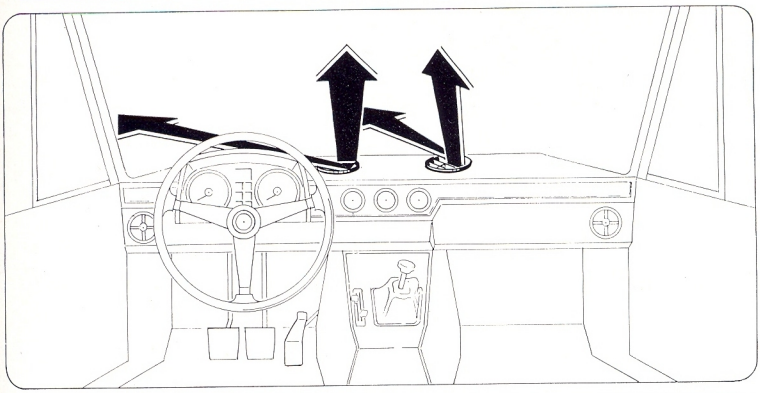

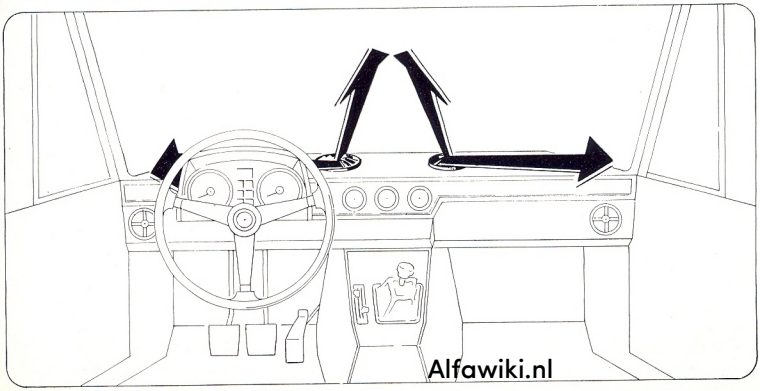

Alfawiki.nl

Windshield demisting

Spot demisting

Windshield and front windows demisting

Ram ventilation outlets (D)

Ram air enters the car through suitable ducts and the outlets shown in the illustration.
The outlets can be opened or closed by moving the lever.

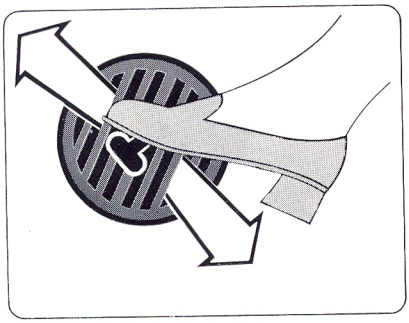

LEVER DOWN
« OPEN »

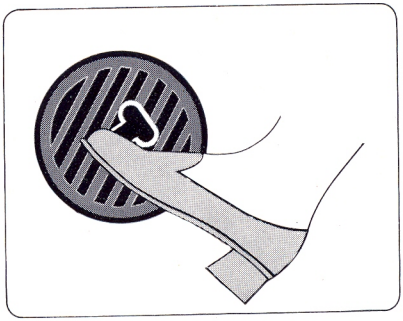

LEVER UP
« CLOSED »

Air discharge

For a best ventilation, discharge ports are provided at rear window posts.

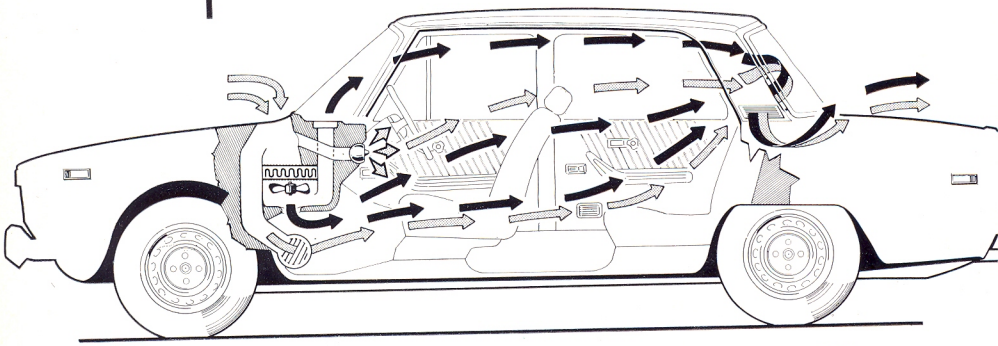

Fresh or warm air

Fresh air

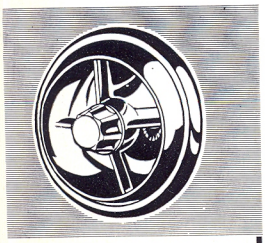

The vents **C** at the instrument panel sides enable to direct the flow o ram air as desired.

The flow of ram air can be regulated by the knob at the center of the vent

Alfawiki.nl

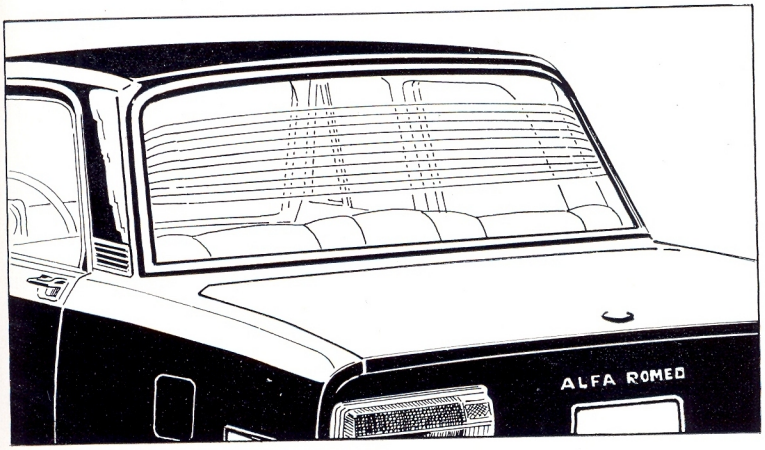

The car is provided with an electrically-heated rear window.

When switched on, the electric resistance embedded in the glass will demist it.

The warning light built into the switch button **28** indicates that the heated rear window is on.

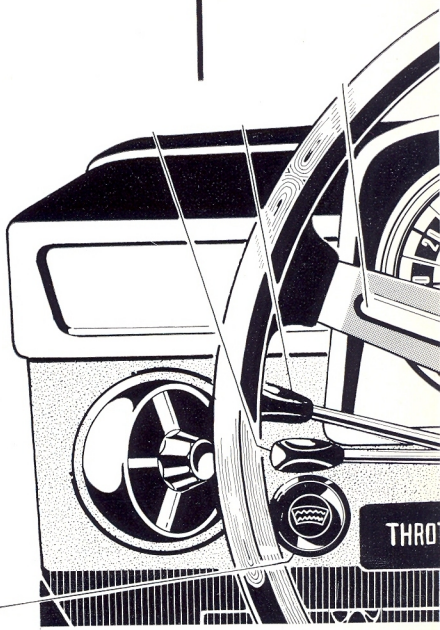

Alfawiki.nl

How to use your car

Sun visors

- The front seats are equipped with padded sun visors which be moved laterally.

Rearview mirror

- The rearview mirror, which disengages automatically in the eve a crash, has a day/night antiglare device.

Lighting

- Courtesy lighting is provided by two dome lights; the switches three positions:
  one in the center: lights always off
  two at the sides: lights always on or automatically operated opening doors.

Ash trays

- At the sides of the rear seats are two ash trays. They ca removed for emptying by pressing down the small central s inside the ash tray.

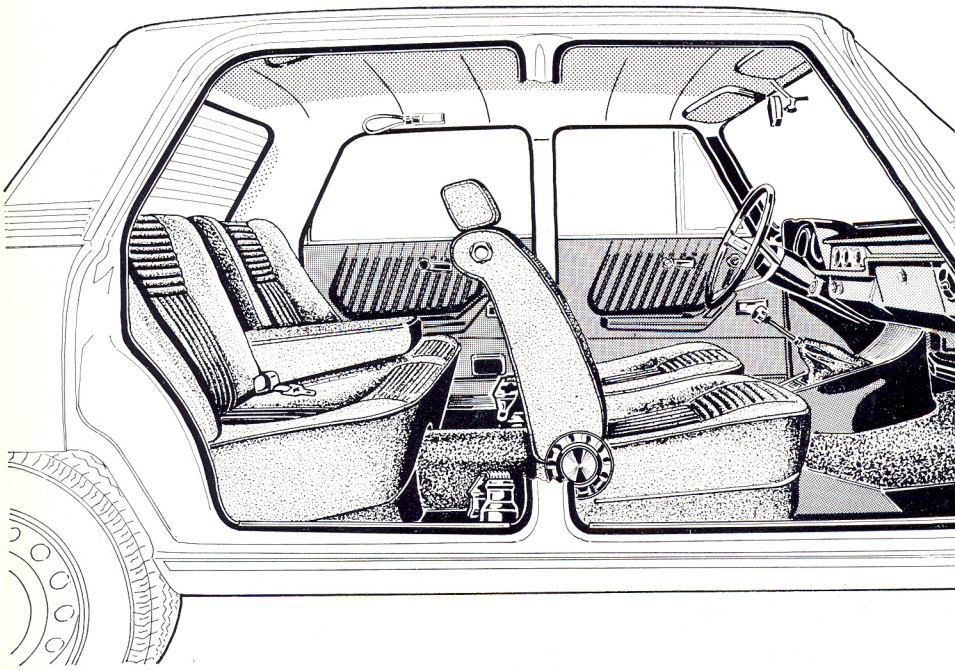

Alfawiki.nl

Front seats

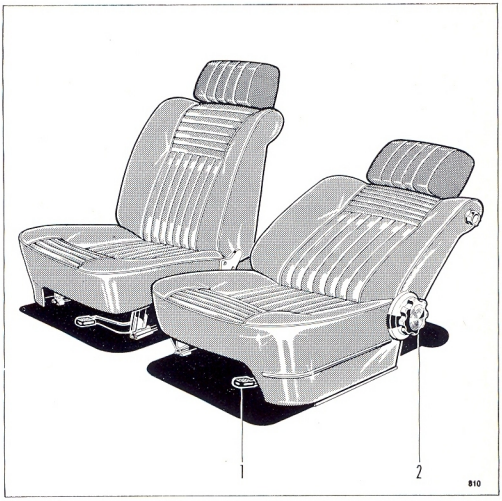

- The positioning of the front seats is controlled by the lever **1** on the front edge of each seat: by freeing the lever the seat may be moved to the position desired.
  The hand wheels **2** at the outboard sides of the seats adjust the angle of the backrests.
- The seats are provided with vertically-adjustable head restraints.

Rear seats

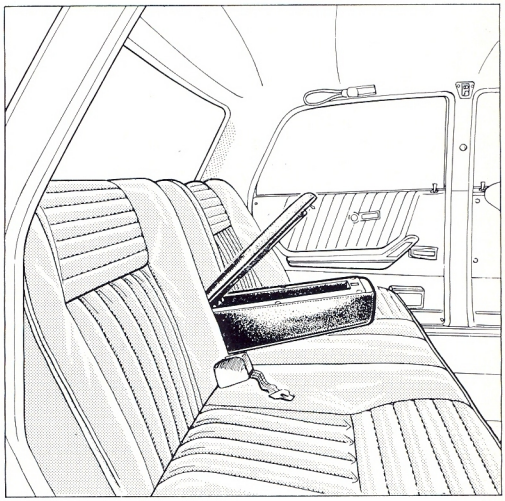

- An arm rest with utility recess is provided between rear seats.

TRUNK

To open the trunk lid, only rotate the key in the lid lock.
The illumination of the trunk is effected by a light that operates automatically when the lid is raised and the parking lights are on.

Alfawiki.nl

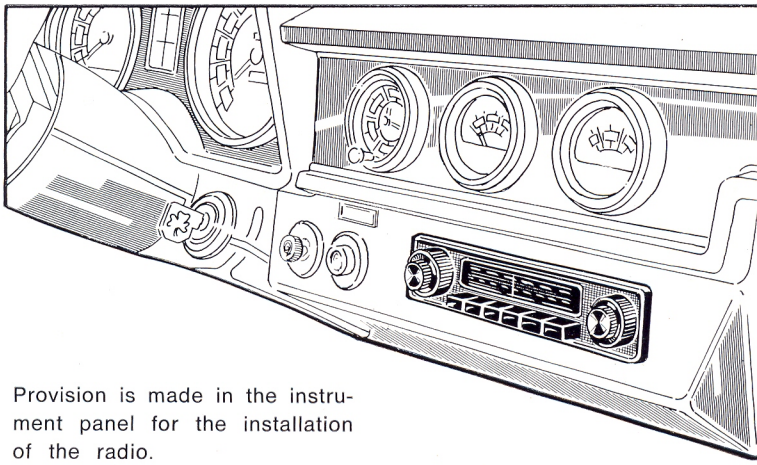

Radio

Provision is made in the instrument panel for the installation of the radio.

The location is:

- in the instrument panel for the radio set
- in the instrument panel top and on backshelf for the speakers.

HOOD

The hood opens opposite travel direction; to release the catch, pul the lever under the instrument panel (30, page 13). The hood is held in open position by the rod. *.

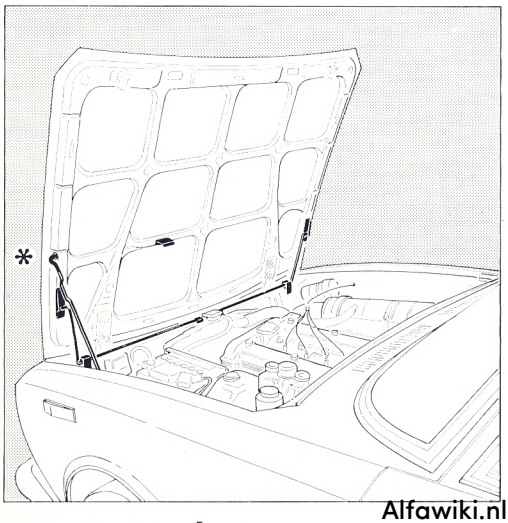

Illumination of the engine compartment is by a light fixed under the hood. It operates automatically when the hood is raised and the parking lights are on. To release the hood in an emergency, pull the ring shown by the arrow.

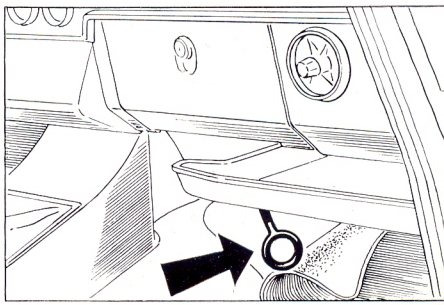

Alfawiki.nl

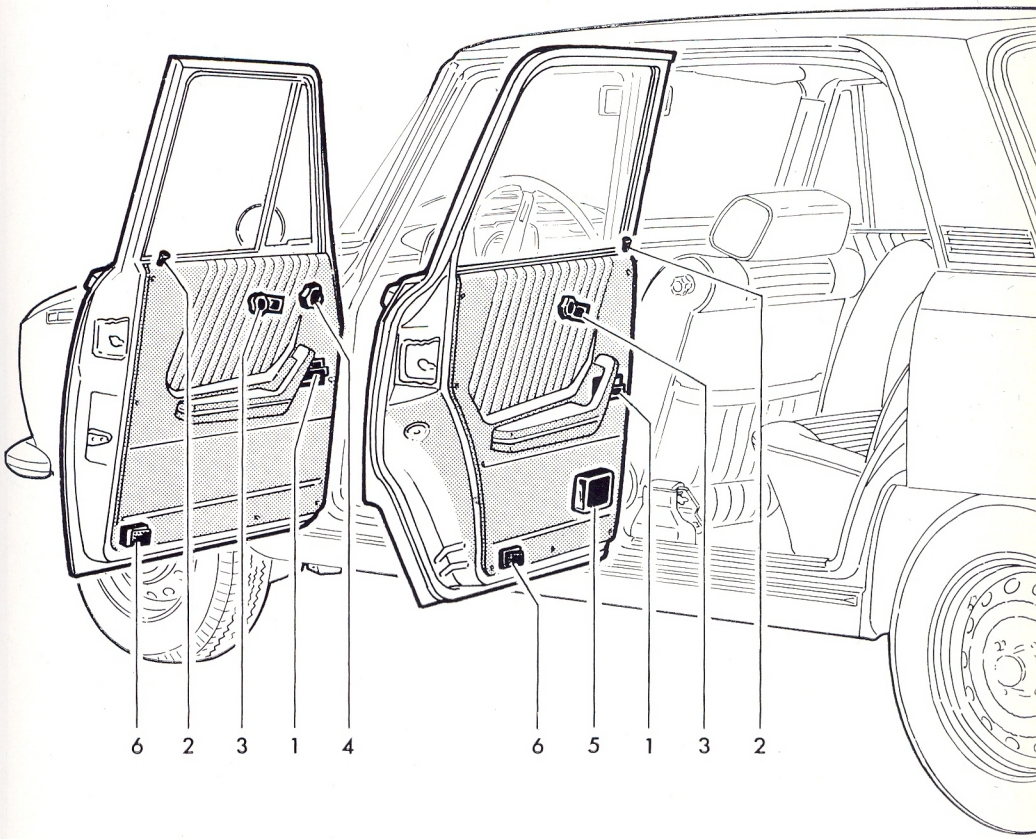

DOORS

1 Handle for opening the door from inside.

2 Safety lock button: for locking the door from inside, push the button down after the door is shut. On rear doors the safety button can be pushed in for prelocking even if the door is open. Both front doors have locks for closing from the outside.

3 Window regulator handle.

4 Vent window control.

5 Ash tray. It can be removed for emptying by pressing down the small central spring inside the ash tray.

6 Reflector for signalling opening of the door.

Alfawiki.nl

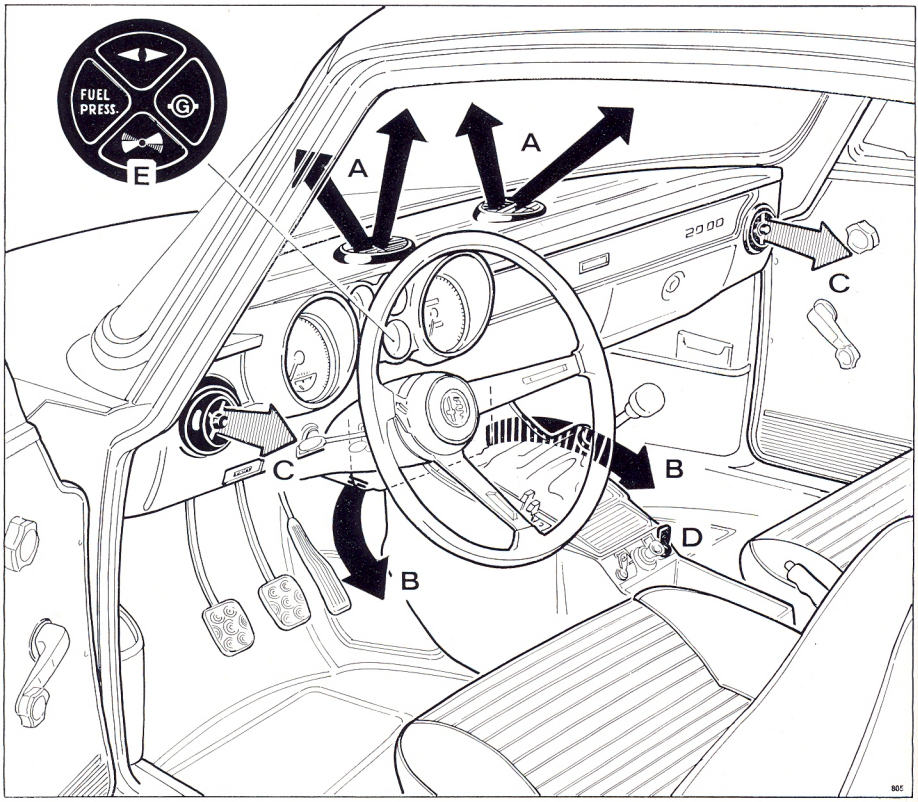

Location of controls and air outlets

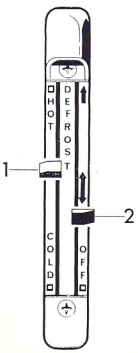

Air enters through:

- **A** for windshield demisting with warm and fresh air.
- **B** for ventilation and heating
- **C** for ram ventilation.

Temperature and air flow

The air admitted to the car can be gradually heated by the upward movement of the lever **1** (operate this lever only when engine is warmed up). The movement of the lever **2** gradually regulates the flow of air through the openings **A** and **B.**

Two-speed electric blower

In order to produce a satisfactory flow of air into the car at low speeds, switch on the blower with the switch **D**. Warning light **E** indicates that this has been done.

Alfawiki.nl

The grilles **A** can be rotated by hand as desired.

The illustrations show some examples of grille positions.

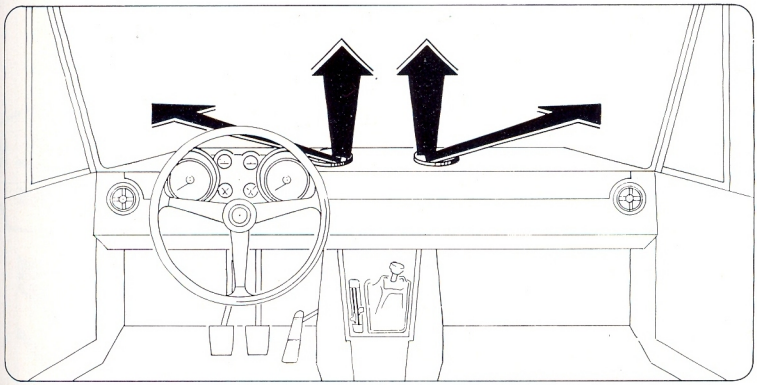

Windshield demisting

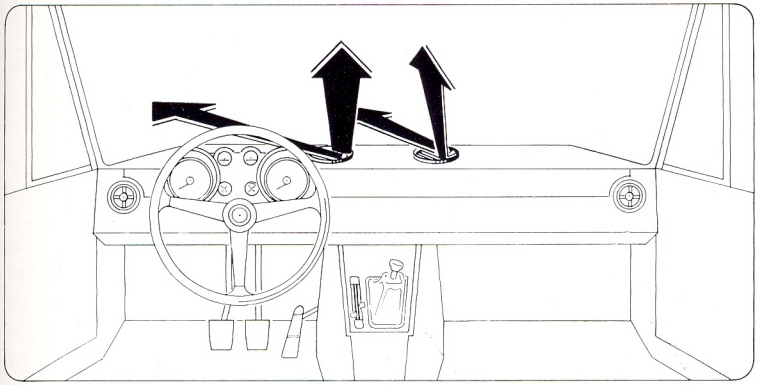

Spot demisting

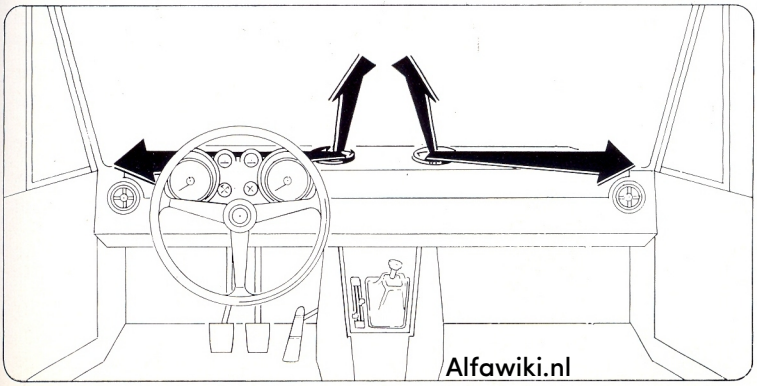

Windshield and front windows demisting

Alfawiki.nl

Ventilating outlets

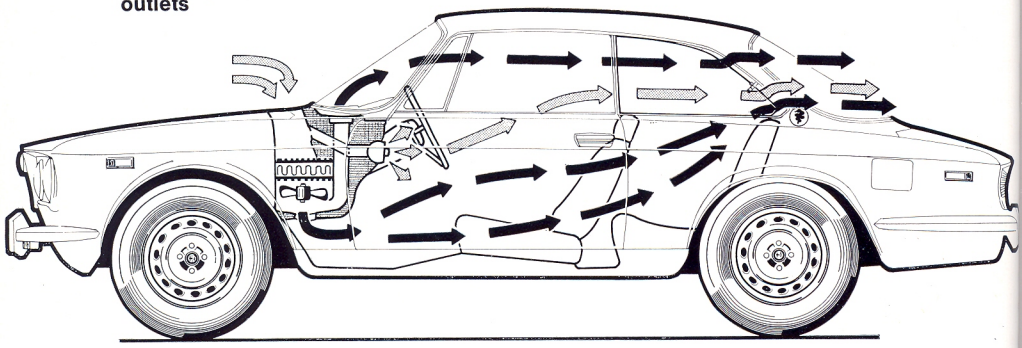

Fresh air

Fresh or warm air

OPEN

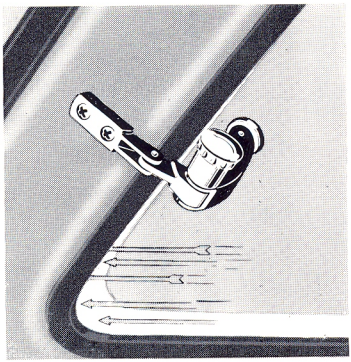

CLOSED

Alfawiki.nl

Rear quarter windows

Opening the two rear quarter windows ensures proper ventilation of the interior by improving the air discharge. The opening of quarter windows can be regulated by adjustable catches.

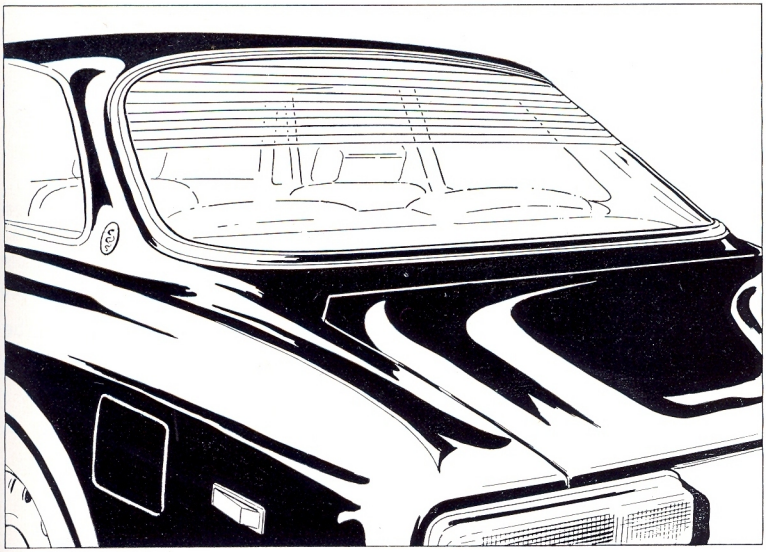

The car is provided with an electrically-heated rear window. When switched on, the electric resistance embedded in the glass will demist it.

The warning light built into the switch button **24** indicates that the heated rear window is on.

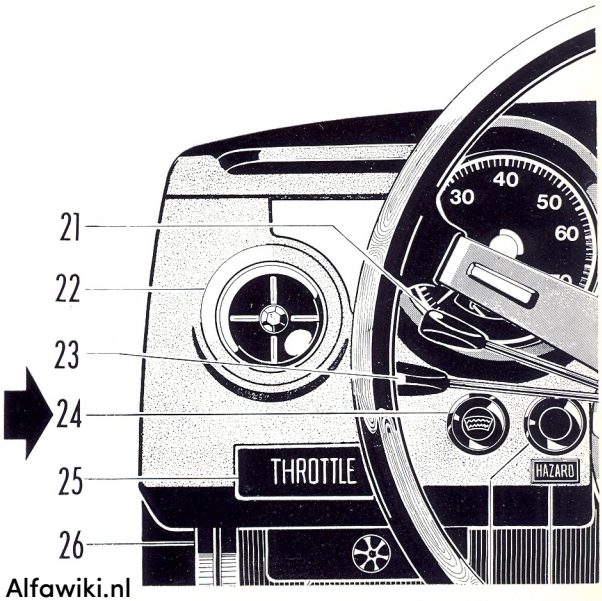

Alfawiki.nl

How to use your car

Suns visors

- The front seats are equipped with padded sun visors which can be moved laterally and are provided with a vanity mirror.

Internal lighting

- Internal lighting is provided by two lights, the switches have three positions:
  one in the center: lights always off
  two at the sides: lights always on or automatically operated when opening doors.

Ash trays

- At the side of the rear seats are two ash trays. They can be removed for emptying by pressing down the small central spring inside the ash tray.

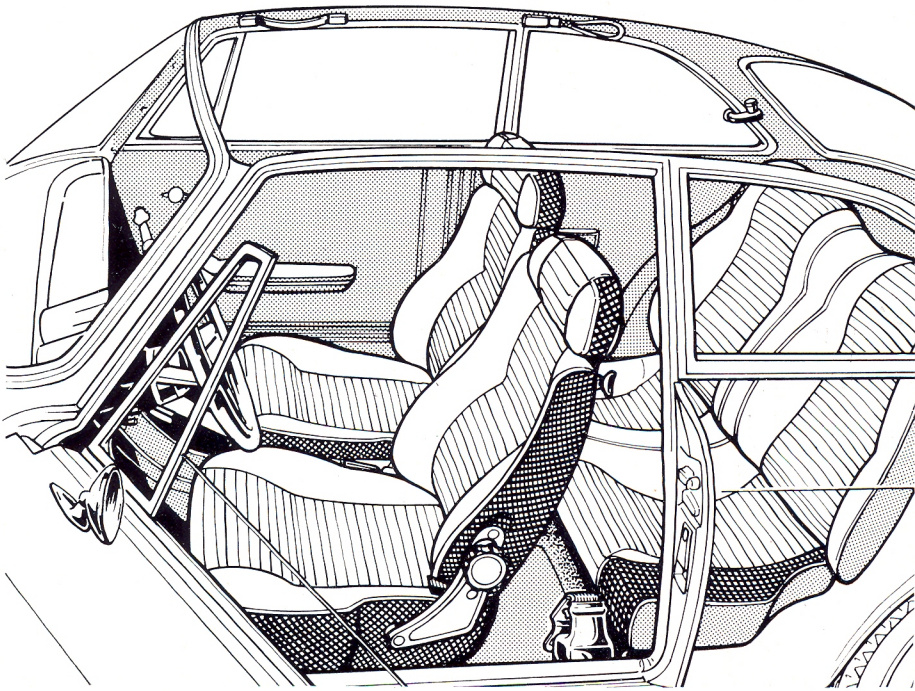

Alfawiki.nl

Rearwiew mirror

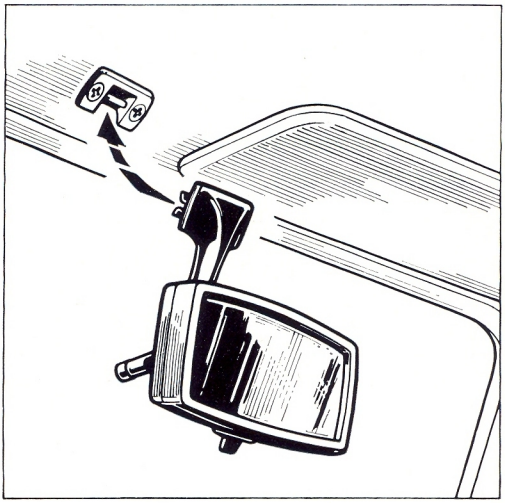

The rearview mirror, which snaps off automatically in the event of a crash, has a day/night antiglare device.

Front seats

The front bucket-type seats have vertically adjustable head restraints. This device is controlled by the knob **1** at the side of backrest.

To facilitate access of passengers to the rear seat, the backrest may be tipped forward by releasing the lever **2**. While the backrest is tipped, the seat automatically moves forward at the same time. The handwheel **3** controls the angle of the backrest.

The positioning of the front seats is controlled by the lever **4** situated on the front edge of each seat: by freeing the lever the seat may be moved to the position desired.

Alfawiki.nl

How to use your car

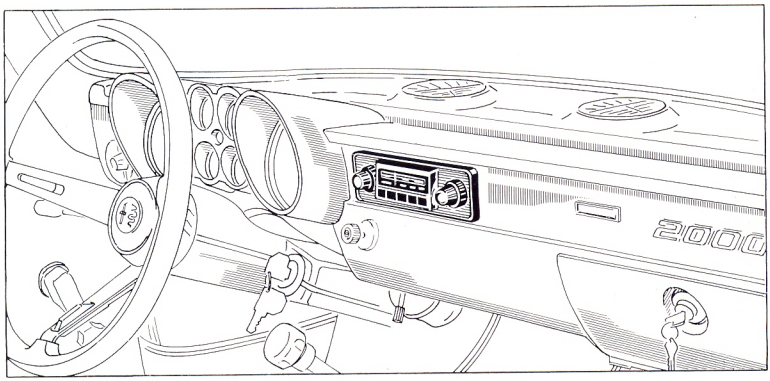

Radio

Provision is made in the instrument panel for the installation of the radio.

The location is:

- in the instrument panel for the radio set
- in the console for the speakers.

DOORS

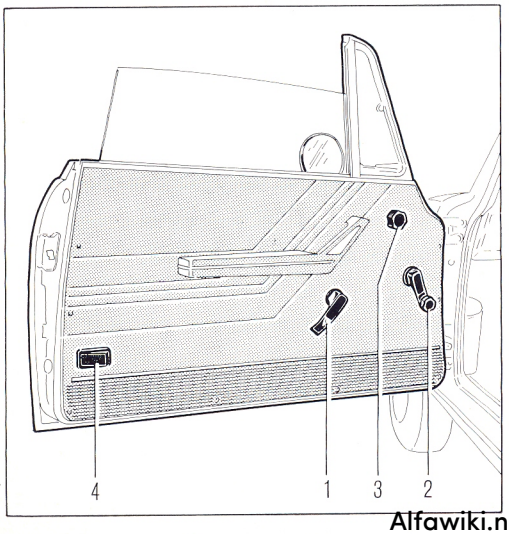

1 Lever to open and lock the doors. Both doors have locks for closing from the outside.
To close turn the key in the direction of travel (the key can be withdrawn only when it is vertical).

2 Window regulator handle.

3 Ventilating window control.

4 Reflector for signalling opening of the door.

Alfawiki.nl

HOOD

The hood opens opposite travel direction; to release the catch, pull the lever under the instrument panel (see 26, page 14).
The hood is held in open position by the rod *.

Illumination of the engine compartment is by a light fixed under the hood. It operates automatically when the hood is raised and the parking lights are on.

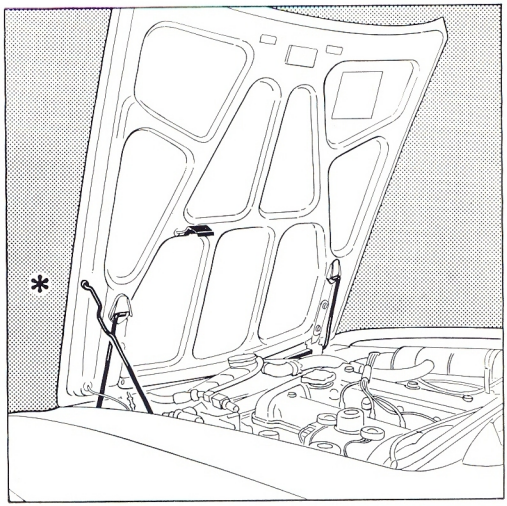

TRUNK

To open, lift the lever situated on the door jamb on the driver's side.
The lock uses the same key as the doors.

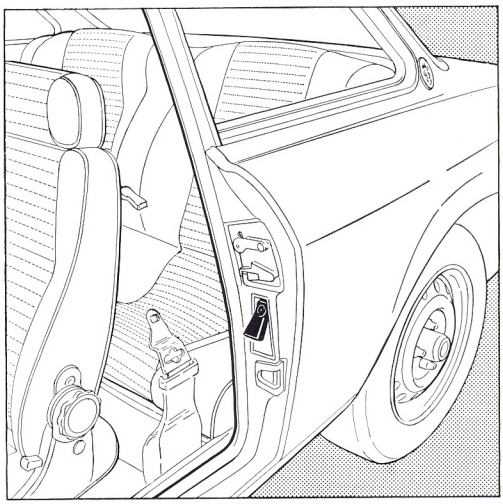

Alfawiki.nl

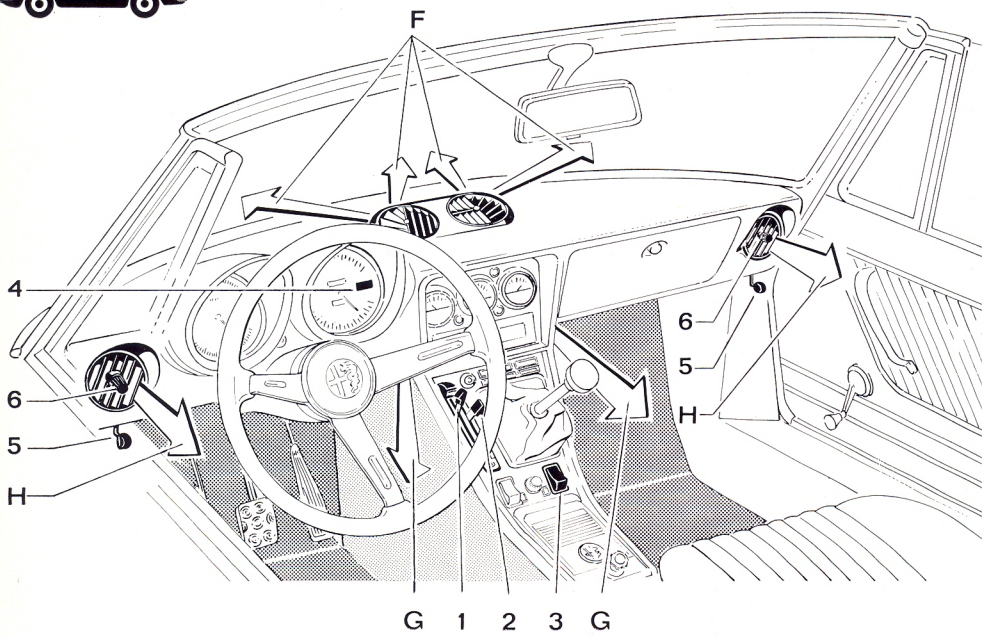

Location of controls and air outlets

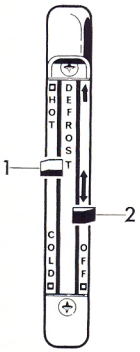

Air enters through:

- **F** for windshield demisting (warm and fresh air)
- **G** for ventilation and heating
- **H** for ventilation

Controls

- The air admitted to the car can be gradually heated by the movement of the lever **1** (operate this lever only when engine is warmed up).

- The movement of the lever gradually regulates the flo of air through the openings and **G.**

- In order to produce a sa isfactory flow of air into th car at low speeds, switch o the electric blower by mean of switch **3**. Warning light indicates that this has bee done.

- To open the outlets **H** act o lever **5**. The flow of air ca then be directed as desire by rotating the knob **6.**

Alfawiki.nl

- The car is equipped with padded sun visors.

Sun visors

- The rearview mirror, which disengages automatically in the event of a crash, has a day/night antiglare device.

Rearview mirror

- Internal lighting is provided by a lamp in the rearview mirror; the switch has two positions: light always on and courtesy light automatically operated when opening doors.

Lighting

- On the passenger's door there is a hand grip.

Hand grip

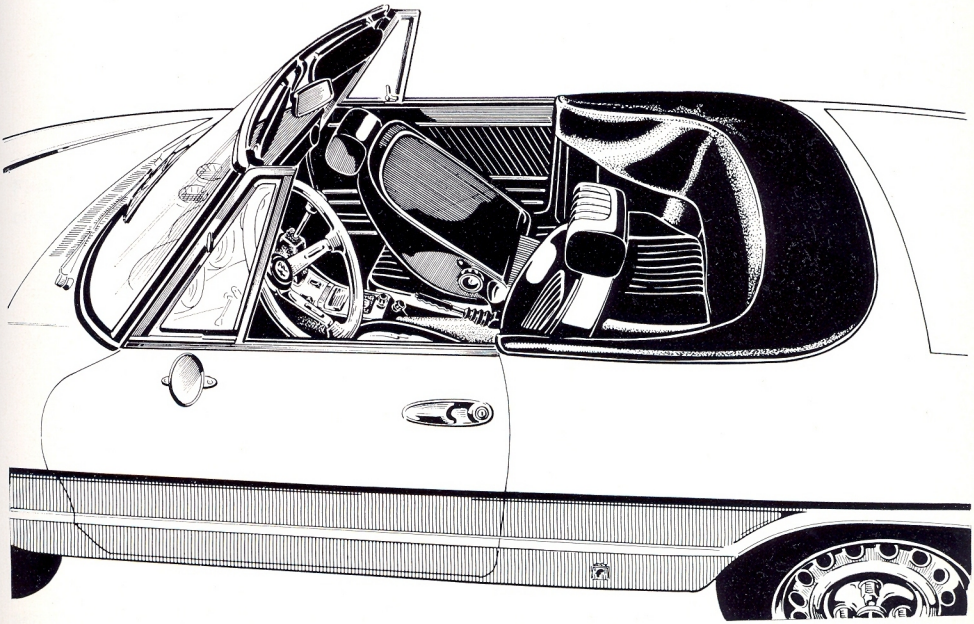

Alfawiki.nl

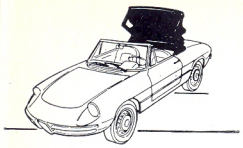

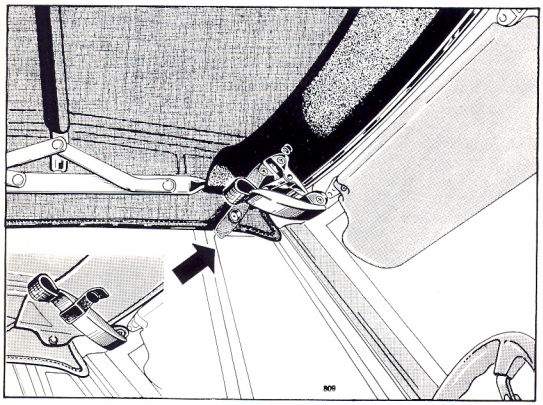

Folding the top

Lower the side windows.
Release the toggle clamps securing the top to the windshield bow.

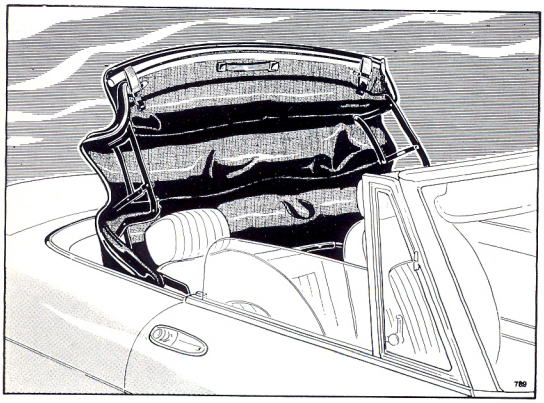

Push the top frame backward.

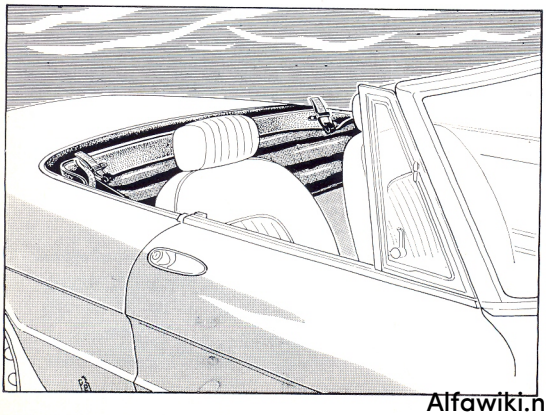

Fold the top into its housing taking care not to crumple or scratch the plastic window.

Alfawiki.nl

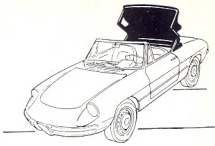

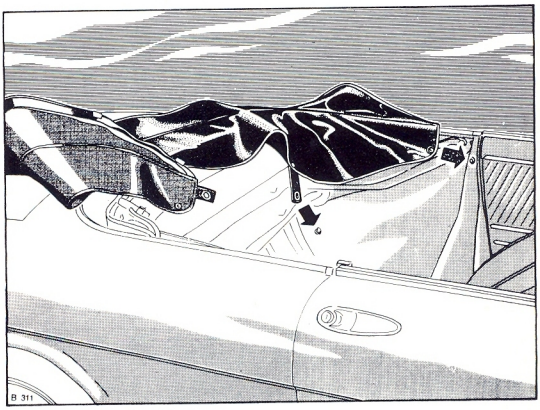

Spread the top cover on to the top and secure the cover with the fasteners.

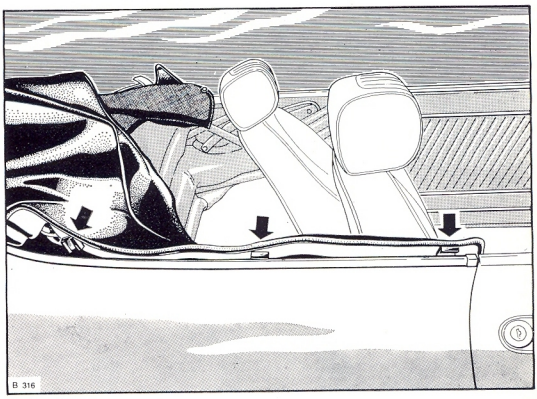

Finally, insert the plastic clips into the chrome moulding.

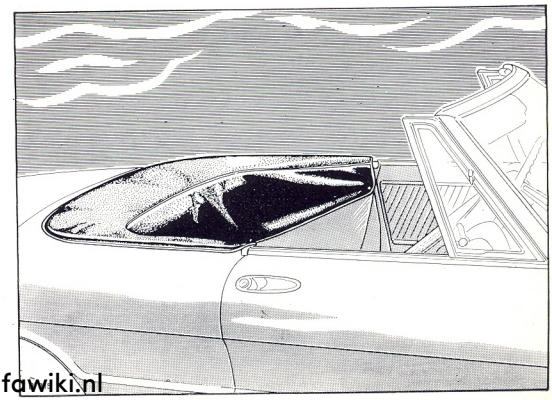

Note: to raise the top reverse the folding procedure.

Alfawiki.nl

How to use your car

Seats

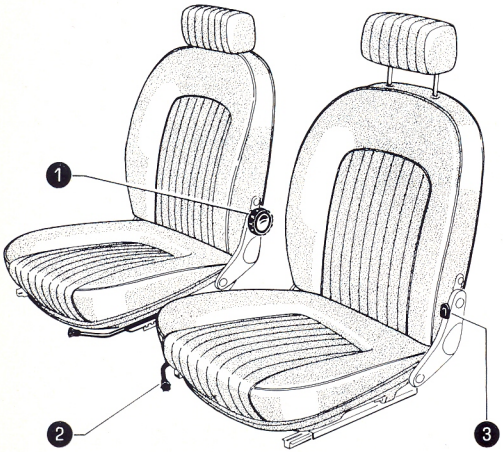

- The handwheels **1** at the inboard sides of the seats control the angle of the backrests. The levers **3** at the outboard sides of the seats allow to unlock the backrests for tipping forward.
- The positioning of the seats is controlled by the lever **2** on the front edge of each seat: by freeing the lever the seat may be moved to the position desired.
- The bucket seats are provided with vertically-adjustable head restraints.

Doors

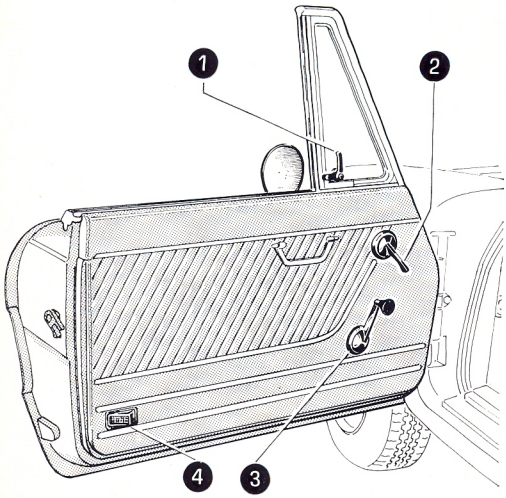

1 Vent window control (with a safety catch).

2 Lever to open and lock the doors. Both doors can be locked from the outside.

3 Window regulator handle.

4 Reflector for signalling opening of the door.

Alfawiki.nl

Radio

Provision is made in the instrument panel for the installation of the radio. To install it, remove the ornament from the instrument panel.

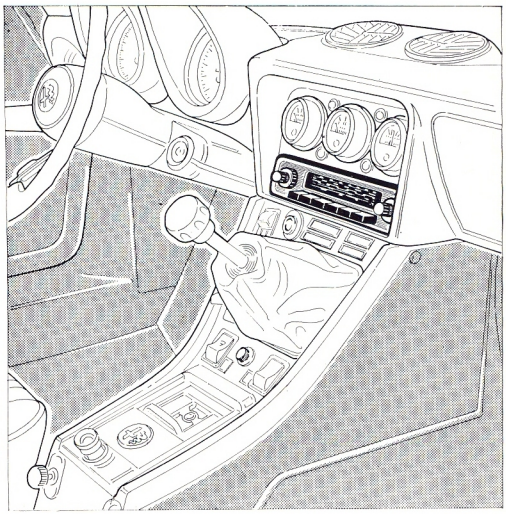

Hard top

Provision is made for the installation of a hard top.

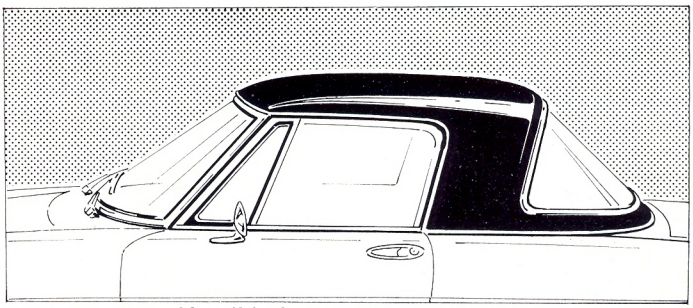

Alfawiki.nl

How to use your car

Hood

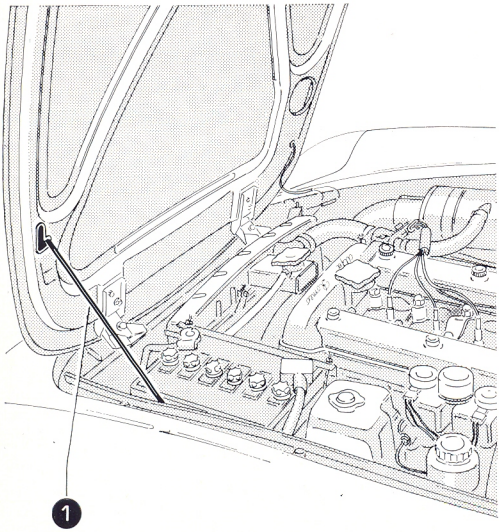

The hood opens opposite travel direction; to release the catch, pull the lever under the instrument panel.
The hood is heid in open position by the rod **1.**

Illumination of the engine compartment is by a light fixed under the hood. It operates automatically when the hood is raised and the parking lights are on.

Trunk

To open, lift the lever situated on the door jamb on the driver's side. The lock uses the same key as the doors.

Lighting of the trunk is provided by a suitable lamp. It operates automatically when the lid is raised and the parking lights are on.

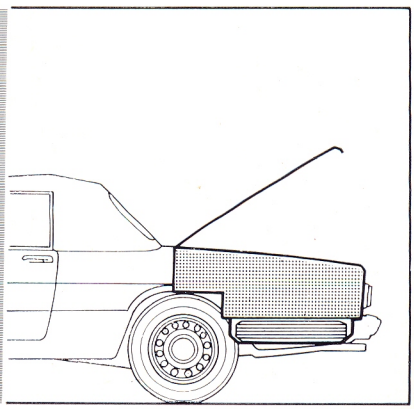

Alfawiki.nl

The wheels are of the pressed steel type.

Wheel removal

- Slacken wheel nuts by one turn with the wheel wrench. Turn the nuts **counterclockwise** to unscrew.
- Raise the car by inserting the jack arm in the special socket in the body rocker panel.
  CAUTION: before operating the jack, apply the parking brake.
- Fully unscrew the nuts and remove the wheel.

Reinstallation

- Tighten the nuts carefully in diagonal order. Check again tightness of nuts after lowering the jack.
  Turn the nuts **clockwise** to screw in.

TOWING

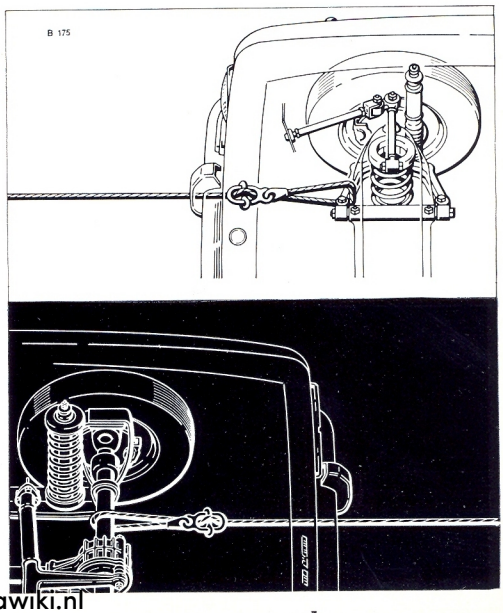

Take A tow

When taking a tow, secure the cable only to the front suspension lower arm adjacent to its attachment to body.

Take IN tow

When towing another vehicle, secure the cable to the axle tube making certain not to damage the pipes of hydraulic brakes.

Alfawiki.nl

The cars are fitted with safety belts of either lap or harness type according to the model.
The front seat belts are equipped with retractors. The Berlina model has lap belts with retractors even at the rear seat.

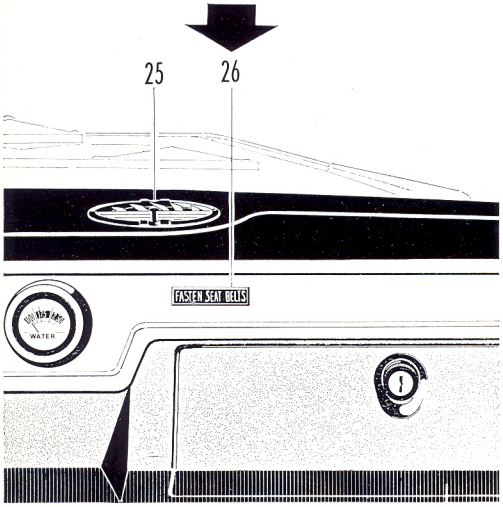

Berlina and GT Veloce

Purpose of belt retractors is to provide a neat stowage of the belts when not worn by the driver or the passengers; a switch in the retractors of front seats controls a warning light (see illustrations) and a buzzer which will warn until either the driver or both the driver and the right front seat passenger apply the belts.

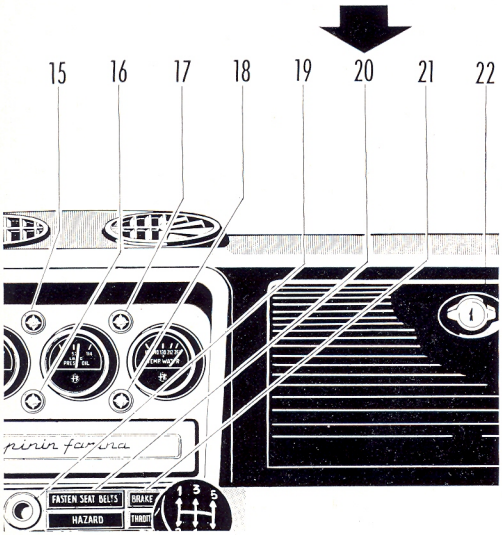

Spider Veloce

The retractor of the front passenger's seat belt operates the warning light and the buzzer whenever a certain pressure is applied to the seat.

Alfawiki.nl

The cars are equipped with safety belts of lap and lap-shoulder type as shown below.

BERLINA FRONT SEATS and **GT VELOCE:** LAP-SHOULDER

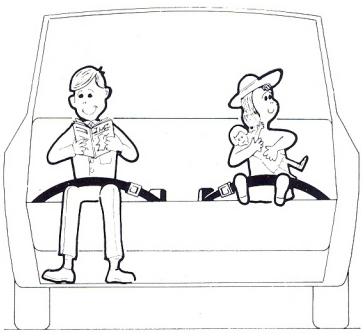

BERLINA REAR SEATS: LAP

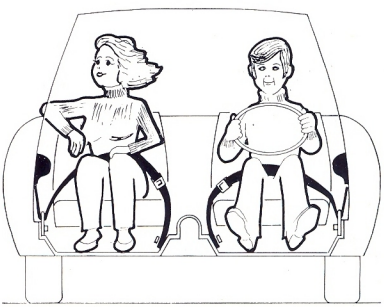

SPIDER VELOCE: LAP

Alfawiki.nl

LUBRICATION

Routine lubrication after Coupons A and B:

EVERY 300 mi.

1. Check level of engine oil and top up if necessary.

   When checking push the dipstick all the way down. Never allow the oil to fall below the minimum or to exceed the maximum level while topping up.

EVERY 3,000 mi.

2. Change engine oil (or every 6 months whichever comes first). (See page 60).
3. Change oil filter. (See page 61).
4. Lubricate ignition distributor (See page 78).
5. Check level of transmission oil and top up if necessary. (See page 87).
6. Check level of differential oil and top up if necessary. (See page 88).

EVERY 6,000 mi.

7. Check level of steering box oil and top up if necessary. (See page 91).
8. Grease drive shaft slip yoke (See page 87).

EVERY 12,000 mi.

9. Change transmission oil. (See page 87).
10. Change differential oil. (See page 88).

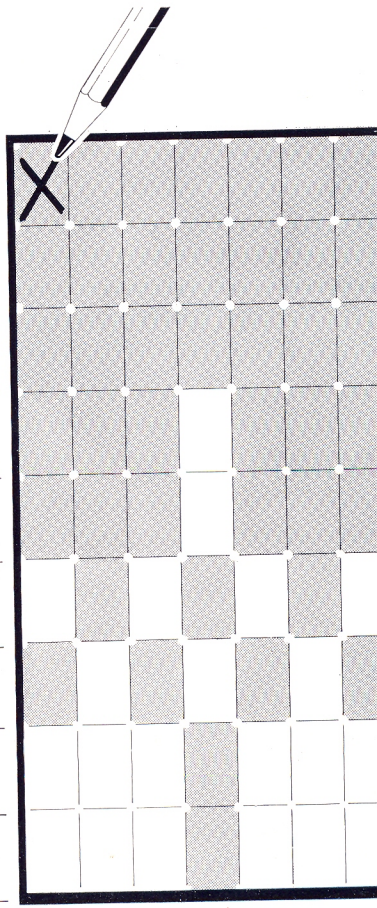

MILEAGE COVERED

TICK EACH ITEM AT THE RESP
MILEAGE

OCCASIONALLY Grease the linkage joints or hinges of:

- throttles
- clutch & service brake
- parking brake
- doors & lids

Grease flexible shafts & cables

Alfawiki.nl

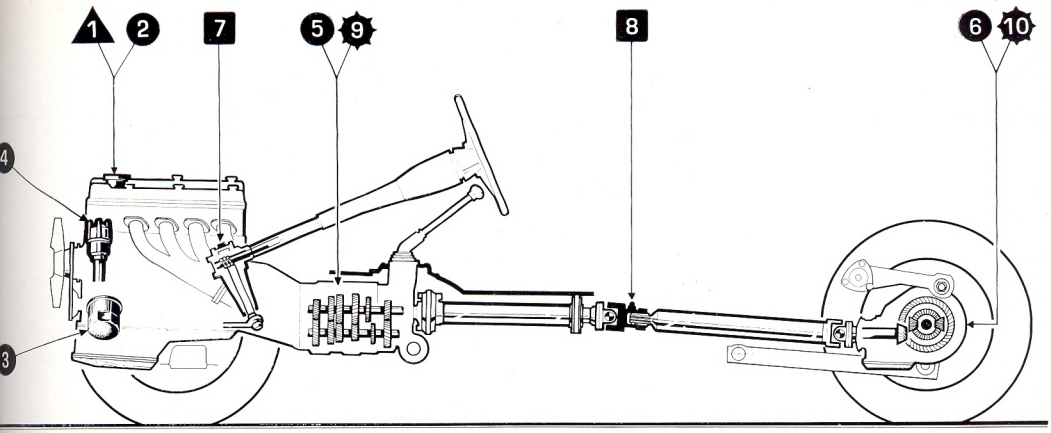

LUBRICANTS

PART	Classification	Commercial equivalents		
		AGIP	ESSO	Shell
Engine	SAE 20 W/50 API MS	AGIP F.1 WOOM SAE 20 W/50	UNIFLO Motor Oil 10 W - 20 W - 40	Super Shell Motor Oil 10 W/40
Transmission Steering box and differential	SAE 90 EP	AGIP F.1 Rotra MP 90	ESSO Gear Oil GX 90	SHELL Spirax HD 90
Drive shaft slip yoke	SAE NLGI 1	AGIP F.1 Grease 15	ESSO Multipurpose Grease « H »	SHELL Retinax G
Front wheel bearings (see maintenance schedule)	SAE NLGI 2/3	AGIP F.1 Grease 33 FD	ESSO NORVA 275	SHELL Retinax AX

API - American Petroleum Institute
NLGI - National Lubricating Grease Institute
SAE - Society of Automotive Engineers

Alfawiki.nl

Lubrication

The engine is pressure lubricated by a gear pump mounted on the front cover of crankcase and driven by a shaft thru a pinion keyed to the crankshaft front end.
The oil pressure is regulated by a relief valve.

Oil level

When checking push the dipstick all the way down. Never allow the oil to fall below the minimum or, while topping up, to exceed the maximum level.

Oil change (engine warmed up)

With the engine stopped, drain off old oil thoroughly.

Replace the filter (see page 61).

Replenish with new oil.

Oil replacement after engine reconditioning

With a reconditioned engine follow the instructions given for the **breaking in period.**

Oil pressure

The oil pressure is controlled by a relief valve in the pump body. **If the pressure falls below the minimum values,** an Alfa Romeo Dealer must be consulted to trace and remedy the fault.
Lubricating circuit faults are indicated by a red warning light, too.

Oil pressures with hot engine - psi	
Engine idling	minimum 7-14
Engine running fast	minimum 50 maximum 65-70

Alfawiki.nl

To remove impurities the engine oil is filtered by a full-flow filter in series with the delivery circuit. The filter is fitted with a valve that by-passes the element if it should become clogged.

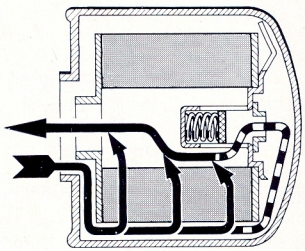

Oil flow with normal operation

Oil flow in an emergency

Replace the oil filter

At the prescribed intervals, replace the filter.
To remove the filter, slacken it with the suitable wrench then unscrew the filter by hand.

After fitting the new filter to the engine, make sure that there are no oil leaks.

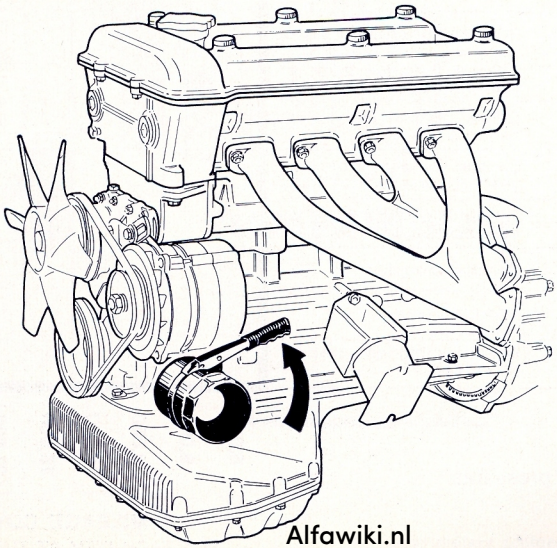

Alfawiki.nl

Routine servicing after coupons A and B

THOUSAND MILES			
3	1	BATTERY	Check electrolyte level.
	2	BRAKE PADS	Check for wear
	3	CI & BR. RESERVOIRS	Check level of fluid
	4	FAN & ALTERNATOR DRIVE BELT	Check tension
	5	VALVE TIMING CHAIN	Check tension
6	6	AIR CLEANER ELEMENTS	Cleaning
	7	AIR CLEANER ELEMENTS	Change
	8	MAIN FUEL FILTER	Change element
9	9	FRONT WHEELS	Check toe-in
12	10	SPARK PLUGS	Inspect and change as necessary
	11	DISTRIBUTOR & TIMING	Inspect and check
	12	IGNITION WIRING	Check
	13	VALVES	Check clearance and adjust as necessary
	14	TANK FUEL FILTER - INJ. PUMP OIL FILTER	Change
	15	FUEL SYSTEM	Check for conditions and leaks
	16	THROTTLES	Cleaning of throats and alignment
	17	THROTTLES & INJECTION PUMP LINKAGE	Check positioning
	18	CRANKCASE VENTILATION SYSTEM	Check
	19	IDLE SPEED	Check
	—	CAR	Road and driveability test
	20	BRAKE SYSTEMS	Change fluid (or once a year whichever comes first)
	21	BRAKE BOOSTER	Check vacuum connections
18	22	ENGINE COOLING SYST.	Change coolant (or once a year whichever comes first)
	23	ENGINE COOLING SYST. & AIR HEATER	Check for sound conditions
24	24	BRAKE SYSTEMS	Check thoroughly
30	25	FAN & ALTERNATOR DRIVE BELT	Change
	26	INJECTION PUMP	Check timing and inspect drive belt

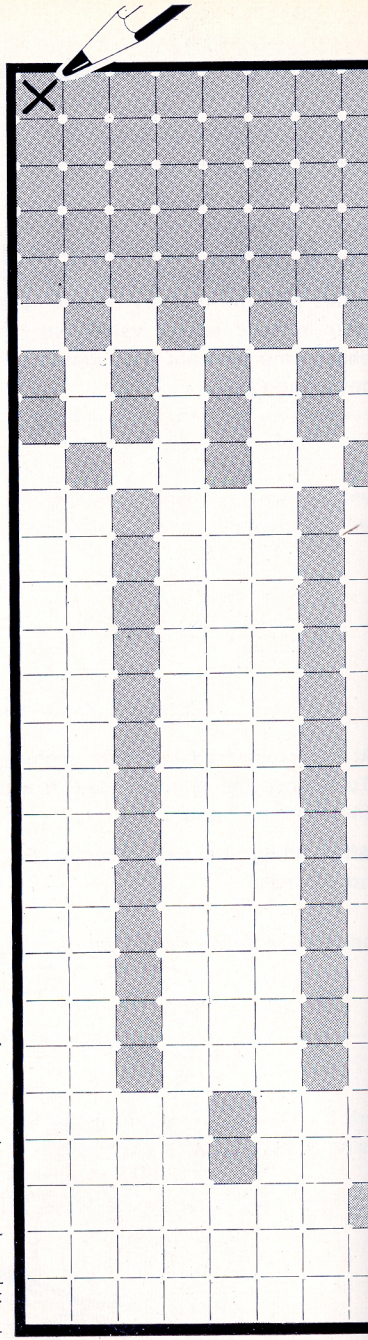

EVERY	6,000	9,000	12,000	15,000	18,000	21,000	24,000

EVERY 300 miles: check tire pressures

OCCASIONALLY

Check level of coolant in engine cooling system reservoir.

MILEAGE COVERED

TICK EACH ITEM AT THE RESPEC
MILEAGE

Alfawiki.pl

MAINTENANCE

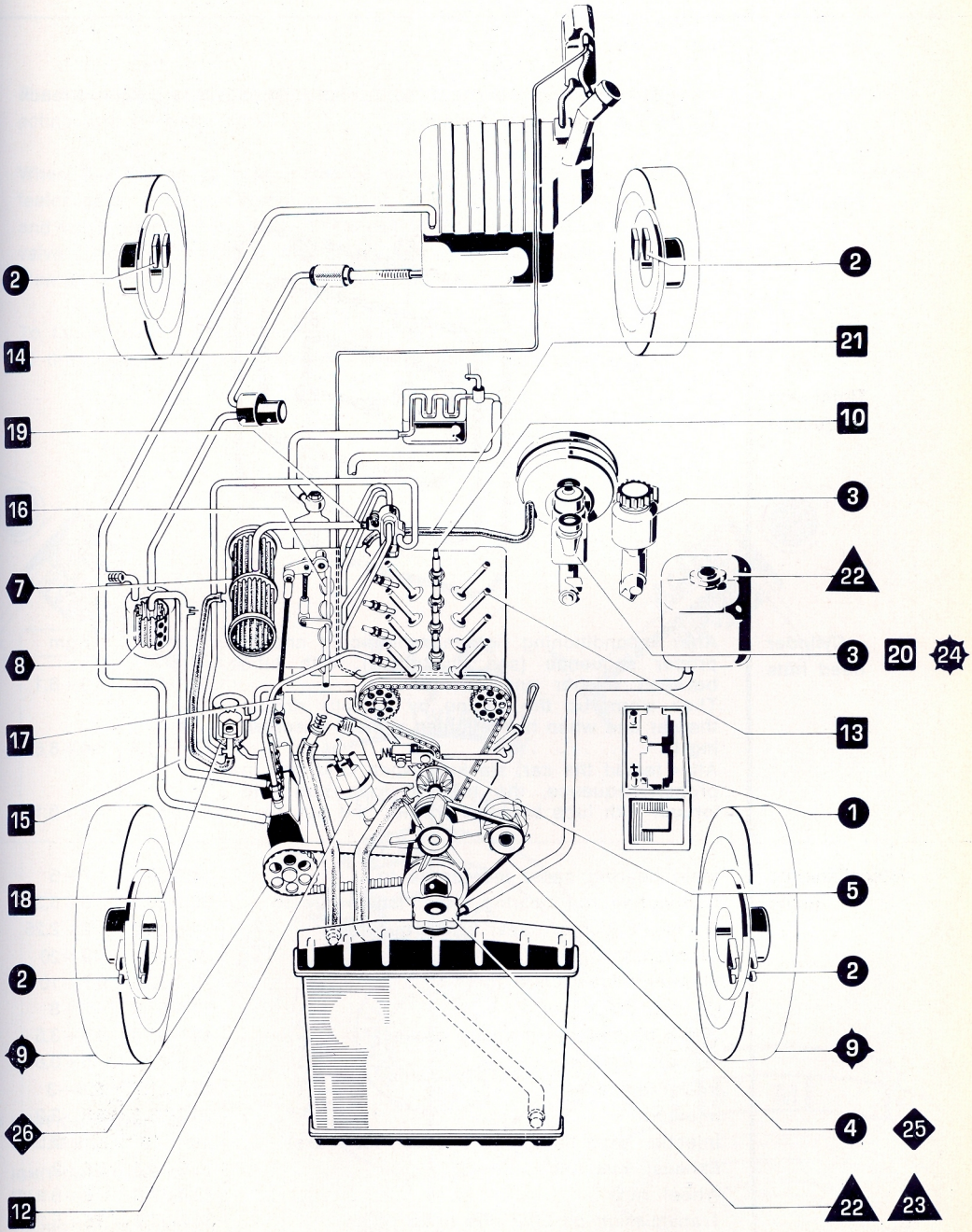

Alfawiki.nl

To avoid stressing the metal, tighten as follows **with a torque wrench set to the prescribed torque.**

Tightening sequence

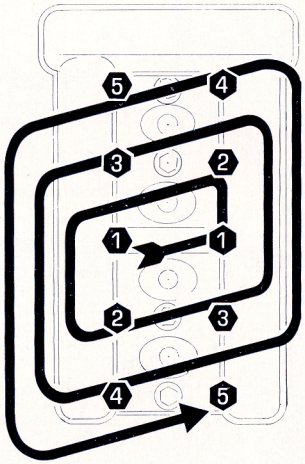

Cylinder head nuts

	lb-ft	Kgm
After reconditioning tighten, when cold and in proper sequence (see illustration), with lube between washer and nut to	57.1-58.5	7,9÷8,1
Then warm up the engine by actually driving the car and when hot **retighten without unscrewing to**	60.7-61.4	8,4÷8,5
After tested the car, slacken, **when cold** and in proper sequence, the nuts **by one turn and torque**, with lube between washer and nut, to .	57.1-58.5	7,9÷8,1

Miscellaneous items

Main bearing caps: lubetorque to	34.0-36.1	4,7÷5
Connecting rod bearing caps: lubetorque to .	36.2-38.3	5÷5,3
Camshaft journal caps: lubetorque to	14.5-16.2	2÷2,25
Crankshaft pulley: lubetorque to	138-144	19÷20
Flywheel: lubetorque to	70.2-72.3	9,7÷10
Oil pan drain plug	50.6-57.8	7÷8
Spark plugs (with graphite grease)	18 -25.3	2,5÷3,5
Throttle throats	3.2-4.7	0,45÷0,65
Intake manifold	18.1-21.7	2.5÷3
Injectors	20.2-23.1	2,8÷3,2
Injection pipe fittings (and check for leaks) . .	abt. 18	abt. 2,5
Exhaust manifold	10.9-14.4	1,5÷2
Wheel nuts	43.4-57.8	6÷8
Transmission oil filler and drain plugs	34.3-37.9	4,75÷5,25
Differential oil filler and drain plugs	10.9-13.0	1,5÷1,8

Alfawiki.nl

The V-mounted overhead valves are directly operated by two camshafts acting thru oil bath cups.

Valve clearance adjustment

When the engine is cold, carefully measure the clearance **G** with a feeler gage. If the clearance is not as specified, remove camshafts and valve cups; measure the thickness **S** of the adjusting pad on each valve stem and replace it with another of proper thickness so that the clearance is the correct one shown in the diagram.

To facilitate this adjustment the pads are made available in a series of thicknesses ranging from **.051** to **.138 in.** in increments of **.001 in.**

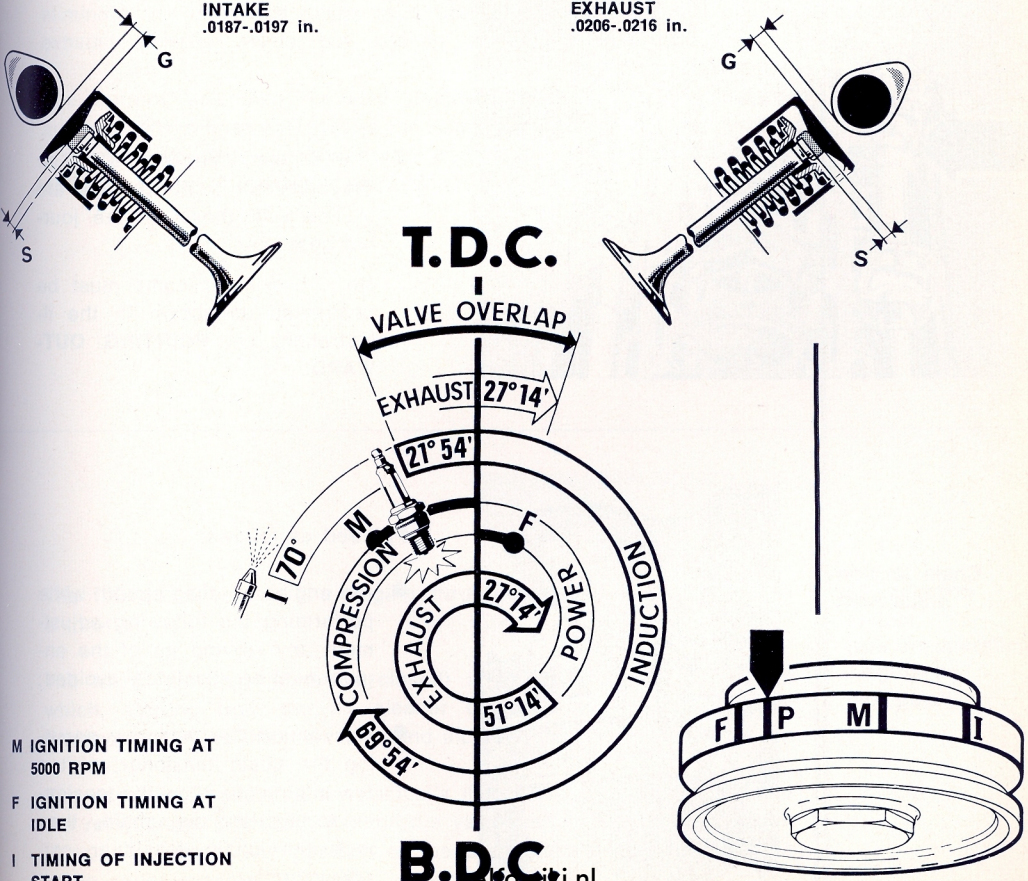

M IGNITION TIMING AT 5000 RPM

F IGNITION TIMING AT IDLE

I TIMING OF INJECTION START

Alfawiki.nl

Checking and timing

Top dead center

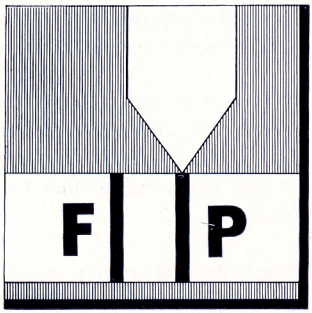

The valve timing is correct when:

- no. 1 piston on compression stroke, the timing mark cut in the crankshaft pulley and marked **P,** is in line with the reference plate and...

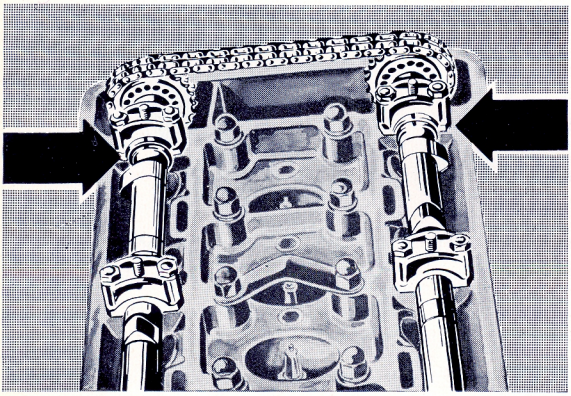

- ... when the timing marks cut on the camshaft front journals are in line with those on the journal bearings.

  No. 1 cylinder cams must be positioned as shown in the illustration, i.e. **POINTING OUTWARD.**

Chain tension adjustment

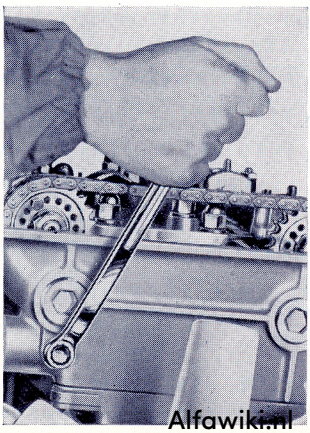

Proceed as follows:

- run engine at idling speed; while performing the following adjustment any revving up of the engine must be absolutely avoided;
- slacken off the setscrew securing the chain tensioner; wait a few minutes to allow the tensioner to tighten the chain, then lock the chain tensioner setscrew firmly.

Alfawiki.nl

Description of fuel injection system

Fuel is supplied to the engine by injection into the intake port of each cylinder in quantities exactly metered in accordance with the opening of throttles and RPM range.

The metering device, or « control unit », consists mainly of a barrel-shaped cam which slides automatically lengthwise as the RPM varies and rotates about its axis exactly timed with the opening of throttles.

The lift of a follower, moving closely against the cam contour, controls the delivery of the injection pump, without any lag in respect to the demand of power.

On deceleration, the fuel delivery is automatically cut off not only to eliminate the unburned gases in a condition remarkably critical for exhaust emission levels, but also to reduce the fuel consumption.

The control unit also includes compensating devices which give automatically proper corrections for atmospheric pressure, engine and ambient temperature, cold starting and initial running ensuring the optimum under all operating conditions.

Air induction system (see the operating diagram on next page)

The filtered air enters the engine thru four intake ports each with a throttle.

The idling air (throttle valves closed) is fed thru a separate circuit which, starting from the air cleaner connects to the intake ports downstream of the throttle valves and includes the idle air equalizer **12.**

The accelerator pedal is mechanically linked thru the rods **9**, **10** and the relay crank **8** to both the throttle valve lever and the control unit lever. Therefore, any position of the accelerator pedal corresponds to an exact position of throttle valve and control unit levers.

Alfawiki.nl

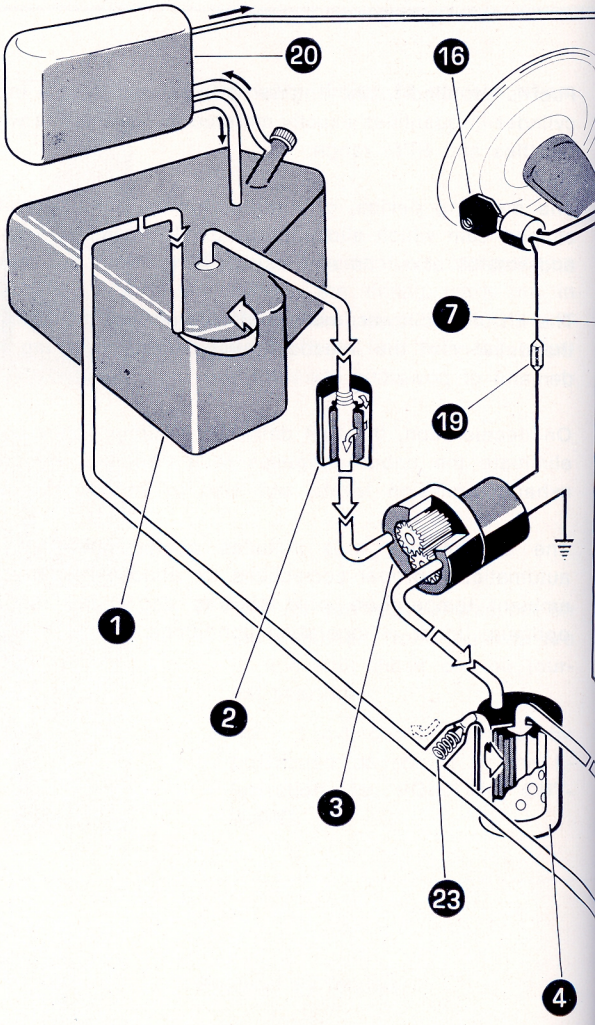

1 Fuel tank
2 Tank filter
3 Electric pump
4 Main filter
5 Injection pump
6 Injectors
7 Throttle pedal
8 Relay crank
9 Relay crank-to-control unit rod
10 Relay crank-to-throttle rod
11 Throttle throats
12 Idle air system
13 Air cleaner
14 Oil separator
15 Battery
16 Ignition switch
17 Pressure switch
18 Low fuel pressure warning light
19 Fuse
20 Liquid-vapor separator
21 Calibrated orifice
22 Injection pump oil filter
23 Pressure relief valve
24 Average seasonal temperature compensator, hand operated
25 Brake booster vacuum port
26 Air hose

Alfawiki.nl

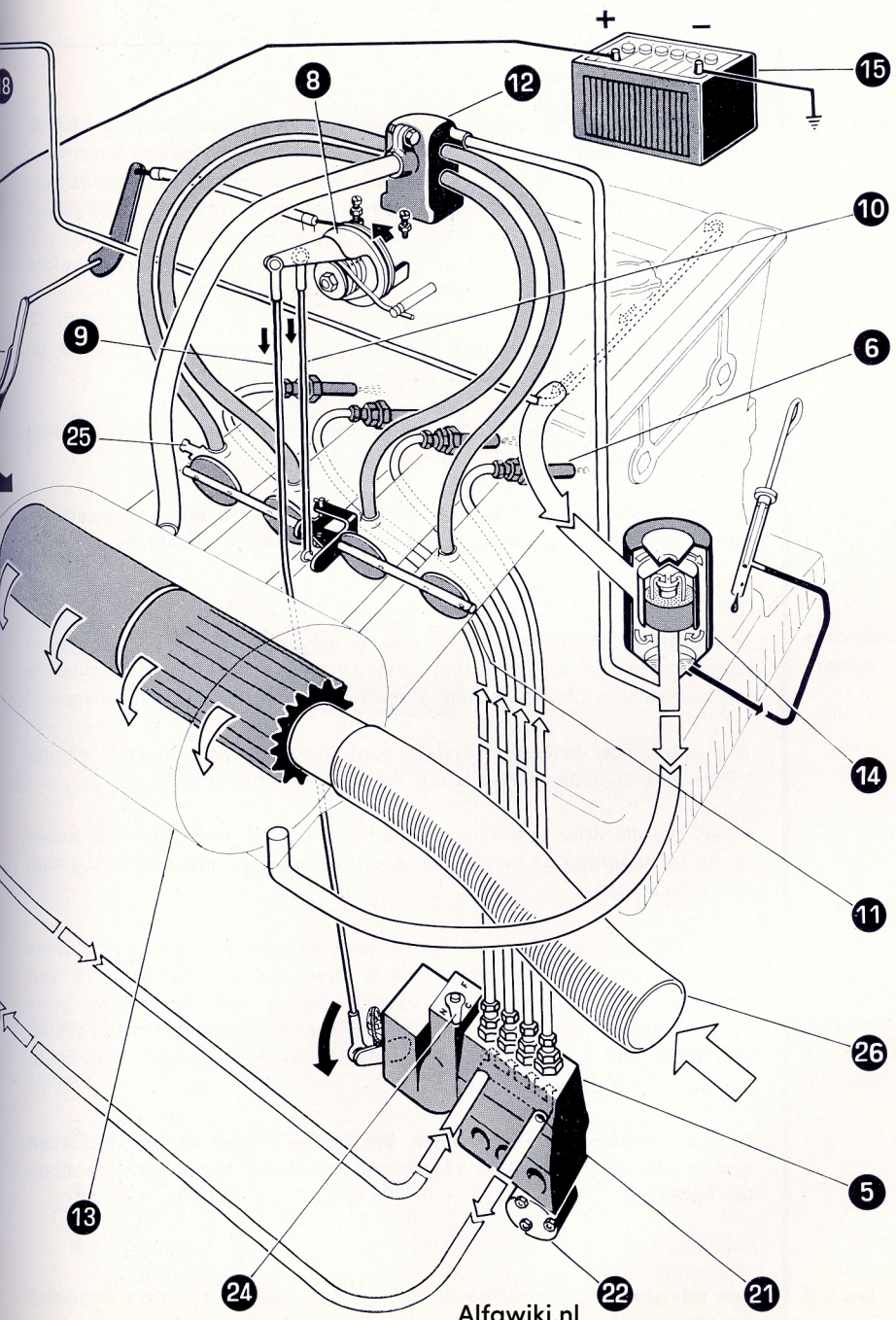

Alfawiki.nl

Fuel feed system

Inserting the key in the ignition switch **16** and rotating clockwise to the first click will operate the electric pump **3**. The gasoline flows from the tank **1** thru tank filter **2** and main filter **4** and feeds the injection pump **5**.

The excess fuel, acting also as a coolant for the injection pump, before returning to the tank, passes thru a calibrated orifice **21** which regulates the fuel pressure within the injection pump. A pressure switch **17** inserted in the delivery pipe will switch on the warning light **18** on dashboard if a pressure drop occurs in fuel lines.

A pressure relief valve in the main filter limits the fuel pump outlet pressure bypassing fuel to the recovery pipe.

At the prescribed periods have the lines of fuel system checked for sound conditions and leaks and the connections for tightness.

Crankcase ventilation system

The exhaust gases and the oil vapors developed during engine operation collect in the camshaft cover; from here they are sucked in the combustion chambers and burned as well as the fuel tank vapors.

The crankcase ventilation system controls gases both at high engine RPMs and at idling speed when the throttles are closed.

When the throttles are fully opened the vapors flow thru the hoses to the oil separator **14** and to the manifold chamber communicating with the intake ports.

When the throttles are partially closed, the secondary circuit comes into operation; such a circuit starts from the oil separator **14** and conveys unburned gases and vapors directly into the intake ports downstream of the throttles by means of the idle air system **12** provided with calibrated orifices. The oil collected in the separator returns to the pan via a suitable hose.

At the prescribed periods have the hoses of crankcase ventilation system checked for sound conditions and leaks and the connections for tightness.

Warning

Any adjustment or servicing of the injection system must be entrusted only to an Alfa Romeo dealer.

Alfawiki.pl

Cleaning or replacing the air cleaner

The air cleaner is equipped with two pleated elements offering the maximum filtering surface. At the prescribed intervals disconnect the air hose, take away the air cleaner cover, withdraw the elements and **clean them carefully from inside with low pressure compressed air.** Moreover at the prescribed intervals change the elements.

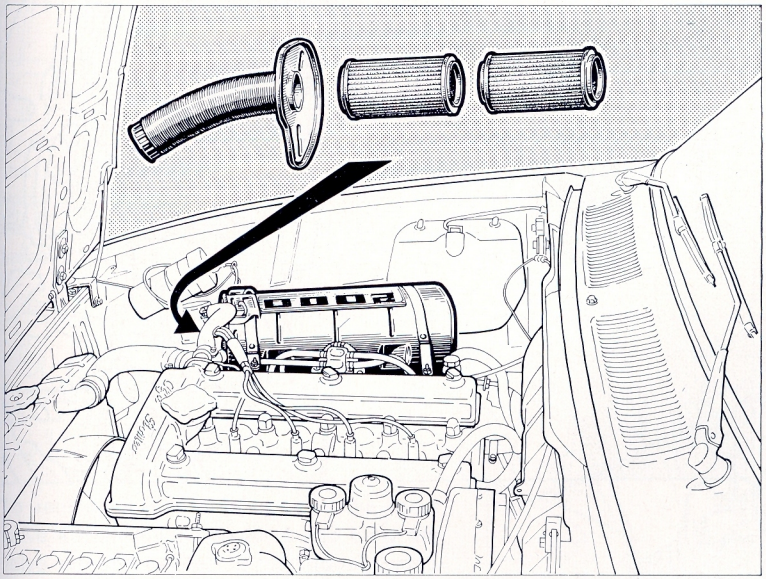

Replacing the main fuel filter element

At the prescribed periods replace the main fuel filter element.
To provide room for this operation, the air cleaner must be removed as follows:

- detach two upper anchoring straps at manifold side;
- loosen at the engine side the four clamps on the intake hoses;
- disconnect the idle hoses, the vent pipe from separator, the air intake hoses and the main crankcase ventilation hose.

Alfawiki.nl

Engine maintenance

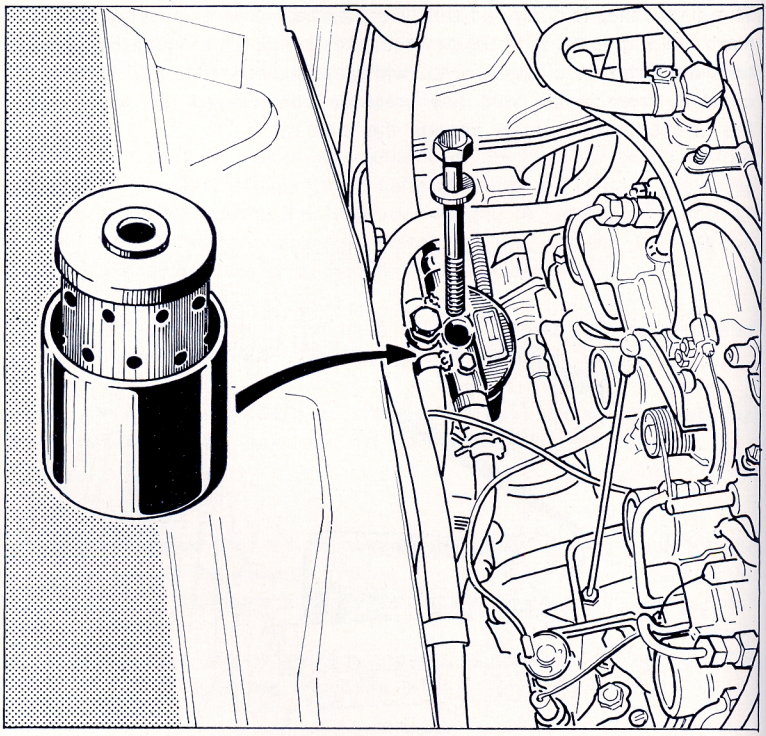

Changing the main fuel filter element (continued)

To change the main fuel filter element proceed as follows:

- **disconnect the battery negative terminal and the positive starter cable;**
- **clean carefully the outside of filter body and nearby lines to make sure no foreign matter could enter the filter on reassembly;**
- slacken the bolt securing the filter to its bracket and remove the filter;
- withdraw the filter element;
- get rid of foreign matter that may have collected in the housing and fit a new element; also replace the gasket between housing and bracket, and the sealing ring on bolt.

Alfawiki.nl

Replacing the tank fuel filter

At the prescribed periods, replace as follows the tank filter (throw away type) located at the rear underbody of the car;

- slacken the bolt on the clamp securing the filter to the underbody;
- loosen the clamps securing the hoses to the filter inlet and outlet adapters; it is advisable to blank out temporarily the pipe from fuel tank;
- remove the filter and replace it with a new one by proceeding in reverse order of removal; take care to fit the hoses properly.

Vacuum relief valve

If, with freezing weather, performance and driveability are impaired or the low fuel pressure warning light comes on, the cause may be vacuum taking place in the fuel tank owing to a stuck closed relief valve **4** and an obstruction **1** of the vent pipe **2** both occurring at the same time.

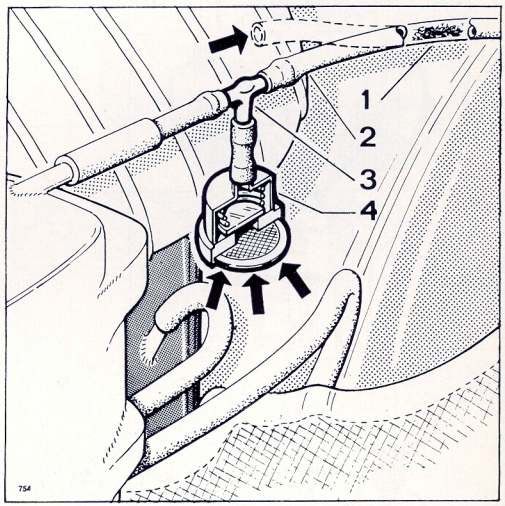

To remedy this trouble, remove the relief valve **4** from the T-adapter **3** and blow the valve through to clear it from foreign matter (if the valve is instead defective, replace it with a new one).

The vent pipe **2** must also be disconnected from the T-adapter and blown through to clear it from any obstruction **1** which may have formed.
Refit all parts.

Alfawiki.nl

Replacing the injection pump drive belt

Should the injection pump drive belt need replacement, proceed as follows:

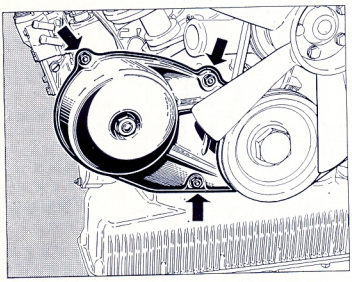

- Unscrew the three attaching nuts and remove the pump drive belt cover.

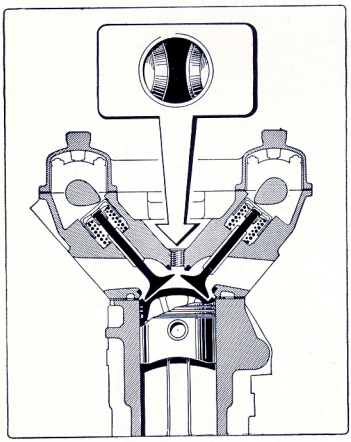

- Turn the crankshaft over (by shifting into fourth and pushing the car either forward or backward) so as to bring the no. **1** piston to the **T.D.C.**; remove the spark plug from cylinder no. **1** to check that both valves, intake and exhaust, are in the open position (overlap stage).
  (If the valves are closed, turn the crankshaft over by one more revolution).

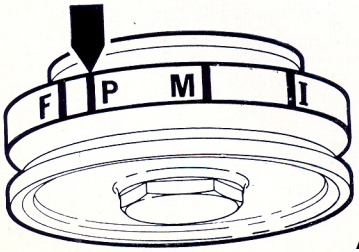

In this condition, the mark **P** on the crankshaft pulley shall line up with the pointer.

Alfawiki.nl

- Push the car slowly backward so as to rotate the crankshaft counterclockwise by **70** degrees, i.e. in such a way that mark **I** on crankshaft pulley and pointer line up.

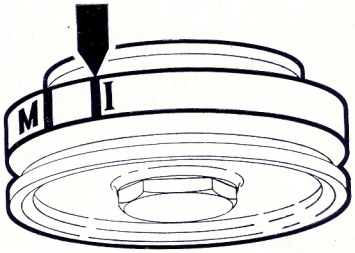

- Loosen the bolt **1** and the nuts **2**, move alternator toward the crankcase and take the alternator drive belt off.

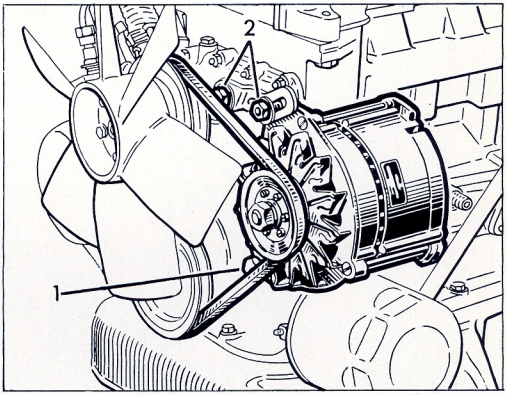

- Replace the injection pump drive belt with a new one; to install the new drive belt, first mount it onto the crankshaft splined pulley.

- Then, rotate the injection pump splined pulley by hand to align the reference mark on the pulley with the pointer on pump body and mount the toothed belt onto the pump pulley; slightly turn the pulley in either direction to engage the nearest spline.

N.B. Reference mark and pointer can be out of alignment within a tolerance of about ± **0 2"** (5 mm.) corresponding to half pitch of splines.

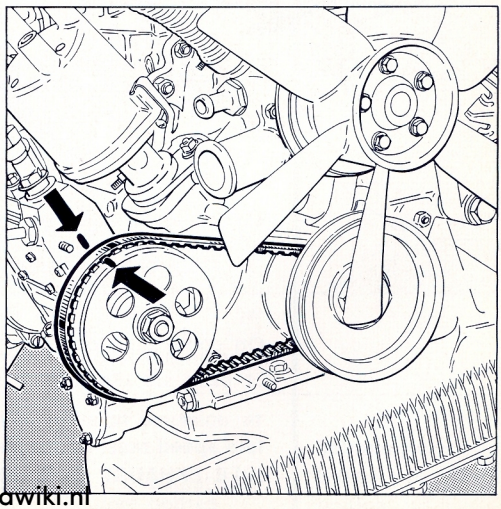

Refit:

- The spark plug.
- The alternator drive belt (and adjust tension-refer to page 84).
- The pump drive belt cover.

Alfawiki.nl

Timing the injection pump

To check the injection pump timing, proceed as follows:

- unscrew the attaching nuts and remove the pump drive belt cover (see figure on page 74)
- turn the crankshaft over (by shifting into fourth and pushing the car either forward or backward) so as bring the reference mark **I** in line with the pointer; remove the spark plug from cylinder no. **1** and check that the exhaust valve is still open (if closed, turn the crankshaft over by one more revolution).

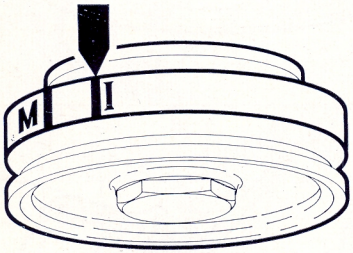

- check that the reference mark on the splined pulley and the pointer on the pump body are aligned.
  Note: reference mark and pointer can be out of alignment within a tolerance of about ± **0.2"** (5 mm.) corresponding to half pitch of the pulley splines.

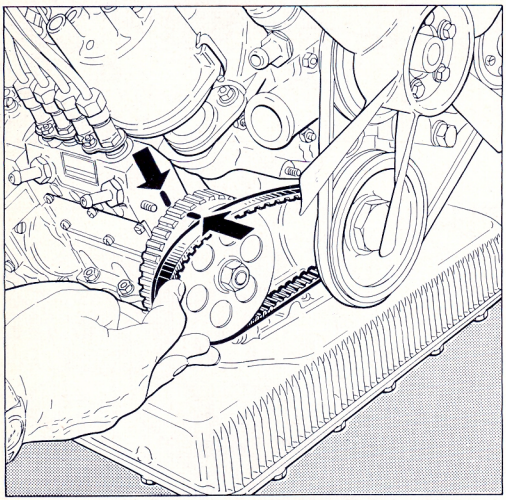

If the pump is out of timing:

- take the drive belt off the pump pulley
- line up the reference marks of the injection pump and refit the drive belt by rotating the pulley in either direction to engage the nearest spline.

On completion of the timing procedure, re-install the drive belt cover.

Recommended idle speed setting

Idle speed must not be lower than: 600 RPM with transmission in neutral
IDLE EXHAUST EMISSIONS:
carbon monoxide: 3.2%; unburned hydrocarbons: 400 ppm

Alfawiki.pl

Idle adjustment

Usually, idle speed is adjusted only when regular maintenance operations as set out on the coupons of Service Coupon Book are performed. However, if a pressing need for idle adjustment should arise, warm up the engine, inspect the ignition system for proper operation, then proceed as follows:

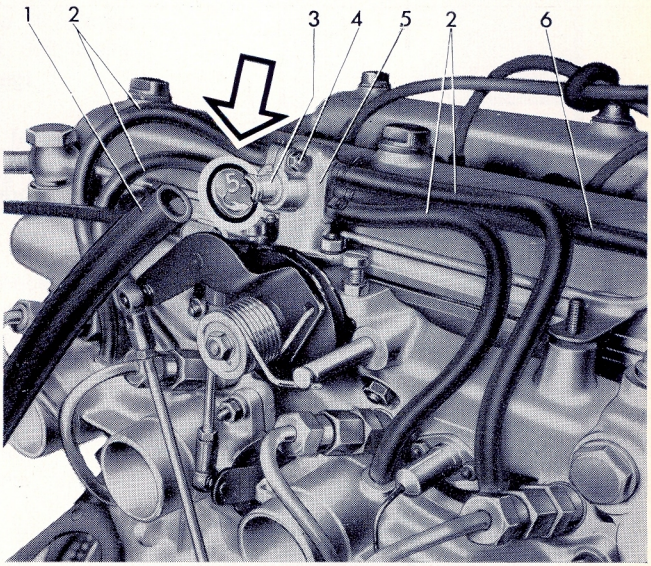

Idle too slow but even
(engine runs smoothly)

This is due to too rich a mixture fed to the engine.
To correct this trouble, remove the hose **1** connecting the idle equalizer **5** to the air cleaner, loosen the bolt **4** and **gradually unscrew** the adjuster **3** with a coin until the engine is idling at as fast a speed as possible yet with no roughness. Back up the adjuster by one third of the amount it was previously unscrewed, then retighten the bolt **4** and refit the hose **1.**

Idle too slow and rough
(engine runs unevenly)

One of the hoses **2** connecting idle equalizer to throttle throats is obstructed (by buckling) cracked or disconnected from a fitting. Reconnect or replace the hose, if necessary.

Idle too fast and rough
(engine runs unevenly; hunting also takes place)

This is caused by too lean a mixture fed to the engine due to air leaking through one of the hoses **2** connecting idle equalizer to throttle throats. Check the four hoses **2** for sound conditions and leaks.
If this does not correct the trouble, remove the hose connecting idle equalizer **1** to air cleaner, loosen the bolt **4** and gradually screw in the adjuster **3** with a coin until the engine is idling smoothly and sufficiently high. Then, back up the adjuster by one third of the amount it was previously screwed in; retighten the bolt **4** and refit the hose **1.**

Performing the above adjustments will also keep exhaust emission at the normal levels.

Should difficulties arise in adjusting the idle, entrust the adjustment to an Alfa Romeo Dealer.

Alfawiki.nl

Engine maintenance

The ignition system is of the battery and coil type with a centrifugal advance governor.

Firing order: 1 - 3 - 4 - 2

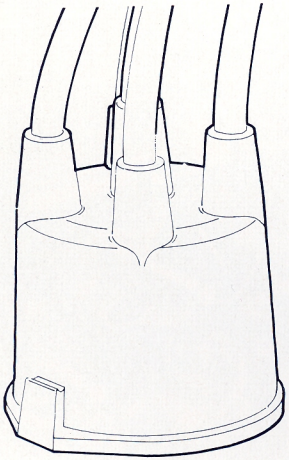

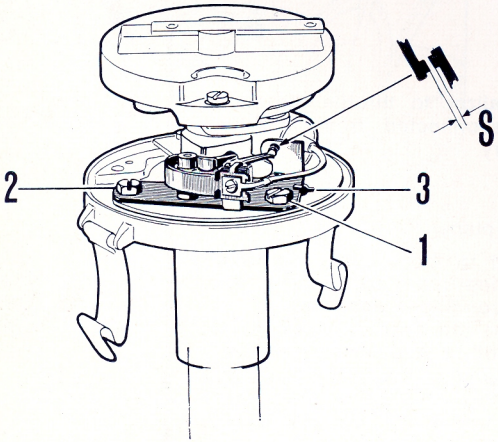

Ignition distributor

At the prescribed intervals:
Check with a feeler gage the contact-breaker point gap.

S = .017 - .019 in.

To adjust, loosen the screws **1** and **2**, insert a screwdriver in the adjustment slot **3** and pry the stationary-point plate back or forth as required.
If contacts are burned or pitted, they may be smoothed with a very fine file and then cleaned with gasoline.

If the contacts show excessive wear, replace them with new ones and have the condenser checked.

Lightly smear the distributor cam with grease.

Check the inside of the distributor cap for any sign of moisture, carbon deposits or cracks. Check also the central power electrode for free movement in its seat, and that spring action is effective. At last, check the rotor arm for proper insulation and terminals on brush and cap for good operating conditions.
Replace the defective parts.

At the prescribed periods have the cables, terminals and rubber protections of ignition system checked for sound conditions.

Alfaworld.it

Checking the ignition timing

To check the ignition timing, proceed as follows:

1 rotate the crankshaft to bring no. 1 cylinder piston to the compression stroke, that is with both valves closed;

2 by slightly rotating the crankshaft, bring the advance mark **F** cut in the drive pulley into line with the reference plate;

3 remove the distributor cap and check that the contact-breaker points begin to open when the engine is turned further in its normal direction of rotation.

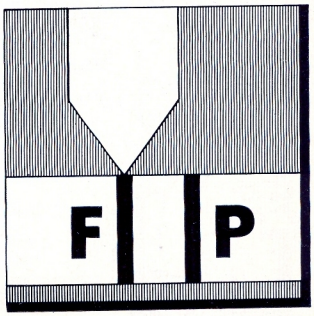

IGNITION TIMING AT IDLE

5°/7° ATDC

A more accurate check should be made with a **stroboscopic gun** as follows:

run the engine at about 5000 rpm and direct the light from the stroboscopic gun onto the pulley: if the timing is correct, the **M** mark on the pulley will be seen in line with the reference plate.

Timing at idle speed must be adjusted with special care as it affects more greatly the emission levels.

IGNITION TIMING AT HIGH SPEED

27°/33° BTDC at 5000 rpm

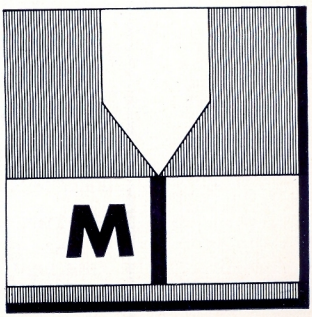

Alfawiki.nl

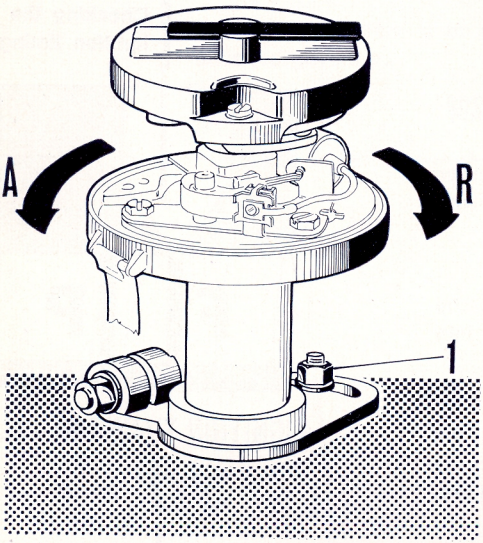

Timing adjustment

If the timing requires adjustment, proceed as follows:

1 unscrew the distributor securing nut 1 on the stud so as to allow the distributor to be rotated together with its supporting clamp;

2 rotate the distributor body counter clockwise or clockwise according to whether it is necessary to respectively advance (A) or retard (R) the ignition setting;

3 retighten the nut, taking care not to move the distributor body;

4 recheck timing.

Timing after removal of distributor from engine

When reinstalling or replacing the distributor, perform the following procedure:

- rotate the crankshaft to bring no. 1 cylinder piston to the compression stroke that is with both valves closed;
- by slightly rotating the crankshaft bring the advance mark **F** on pulley into line with the reference pointer;
- fit the supporting clamp onto the distributor body and tighten the clamp just snug;
- remove distributor cap and rotate the drive shaft by hand to bring the rotor arm in line with the contact for no. 1 cylinder;
- as a trial installation place the distributor on engine and move the supporting clamp so that the stud is centered in the clamp slot **when the contact-breaker points are about to open for no. 1 cylinder;**
- then, remove the distributor with its supporting clamp, taking care not to disturb the distributor body/clamp setting and lock the clamp in place;
- reinstall the distributor and adjust timing as directed above.

Alfawiki.nl

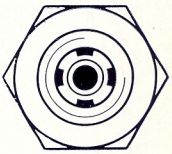

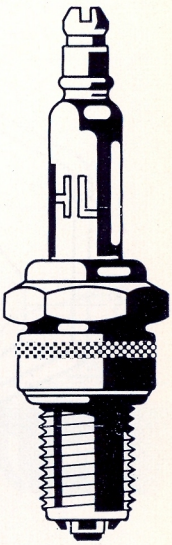

The spark plugs are of the surface gap type with four points and a central electrode. The only maintenance required is occasional cleaning with a brush of the central electrode and points. **No routine adjustment is necessary** of the gap between the electrode and points.

If the ceramic insulator is cracked or the electrodes are excessively worn away, the spark plugs must be replaced.

The standard plugs fitted to the engine are **LODGE HL** A decal, giving the specifications for these plugs, is attached under the hood; here below, the text of the decal is repeated.

In order to comply with the Federal rule regarding the control of air pollution the engine is fitted with **LODGE-HL** spark plugs. These plugs are completely adequate when the automobile is driven at speeds not exceeding the limits specified by speed regulations. If the automobile is driven at sustained speeds higher than the said speed limits, LODGE-2HL spark plugs must be used.

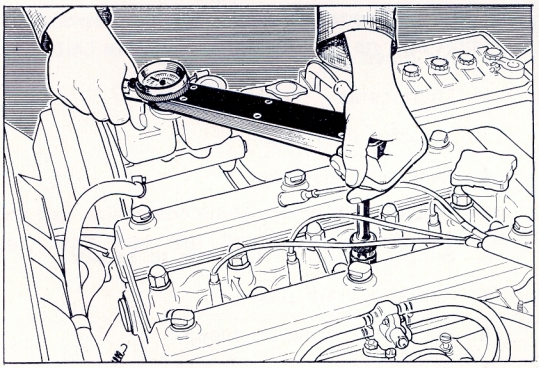

The spark plugs should be tightened when cold to a torque of **18-25.3 lb-ft;** lubricate the threads with graphite grease before fitting.

Under no condition can substitute spark plugs be used, unless they are specifically advised and approved by Alfa Romeo. Use of other plugs can promote serious engine damage, as well as higher emission levels.

Alfawiki.nl

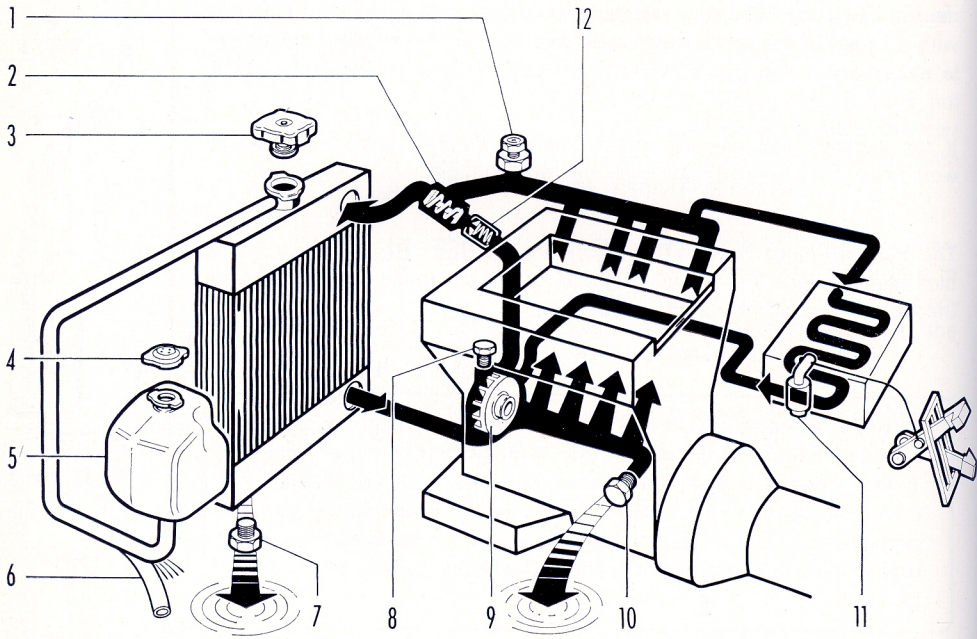

Diagram

1. Air bleed screw on manifold
2. Thermostat
3. Radiator filler cap
4. Reservoir filler cap
5. Reservoir
6. Supply line from reservoir to radiator
7. Radiator drain plug
8. Air bleed screw on pump
9. Coolant pump
10. Drain plug on crankcase
11. Heater valve
12. By-pass control valve

Alfawiki.nl

Cooling system

The cooling system is provided with a compensating reservoir containing a special **Alfa Romeo Coolant Mixture** which gives full protection against freezing down to — 22 °F.

At the prescribed periods have the hoses, connections and filler cap of cooling system and the heater hoses checked for sound connections and leaks.

To ensure the efficient operation of the cooling system, the following procedure should be observed.

Occasionally, check level of coolant in the reservoir: this should be done **exclusively with a cold engine** as with a hot engine the level may increase remarkably, even after stopping the engine.

The level of mixture in the reservoir should never fall below the « Min » nor exceed the « Max » marks.
To top up use Alfa Romeo Coolant Mixture drawn from suitable containers available from **Alfa Romeo Dealers.**

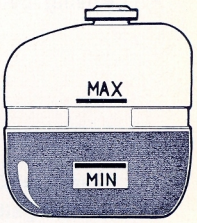

If too frequent a topping up is required, have the cooling system checked by an Alfa Romeo Dealer.

Should sudden and excessive leaks be experienced from the system, the use of fresh water is allowed provided that the specified mixture is restored and trouble remedied **as soon as possible** by an Alfa Romeo Dealer.

WARNING

Never remove the radiator cap unless absolutely necessary; in any case, to avoid severe injuries, wait that the liquid is cooled down to outside temperature.

Changing the coolant mixture

Every 18,000 miles (or once a year whichever comes first) have the coolant mixture renewed by an Alfa Romeo Dealer after the circuit has been flushed with a suitable descaling compound.

Alfawiki.nl

Engine maintenance

IMPORTANT NOTE

The mixture in the cooling circuit gives full protection against freezing down to — 22° F.

In places where the temperature falls below — 22 °F, the mixture can be strengthened as directed on page 31.

It is recommended that this operation be entrusted to an Alfa Romeo Dealer.

Adjusting the tension of fan, coolant pump and alternator driving belt

If the tension is insufficient, the belt will slip and wear prematurely; furthermore:

the cooling action will be affected because of the reduced speed of the fan and pump;

the battery charging current will be reduced owing to the slower alternator speed.

If the tension is excessive, the alternator and pump bearings will be overloaded with the consequent risk of damage.

Therefore it is necessary to check the belt tension at the prescribed intervals.

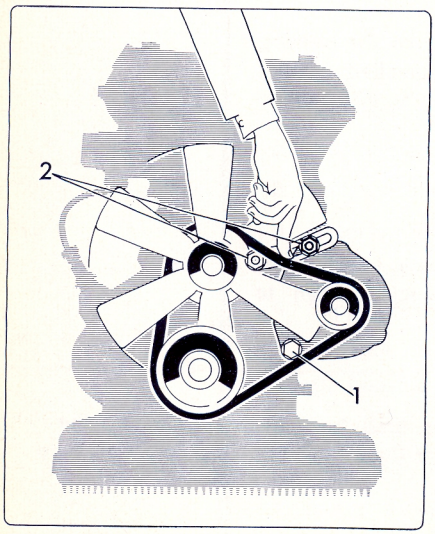

The tension is correct when on pressing the belt down the amount of play is approximately 1/2 in.

To adjust belt tension, loosen the nuts **2** on the link; also loosen the bolt **1**; then, move the alternator so as to obtain the proper belt tension.

After adjusting, tighten the bolt **1** and the two nuts **2** firmly in place.

Alfawiki.nl

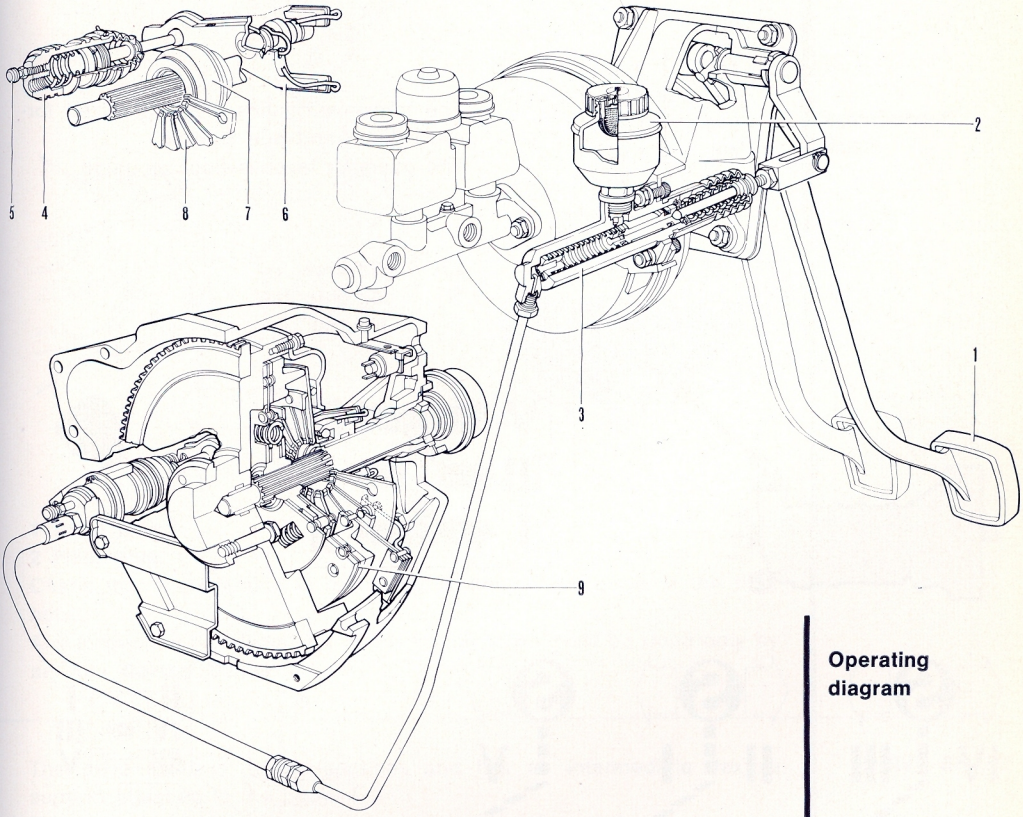

Operating diagram

The clutch is of the self-adjusting, hydraulically-operated, single-plate dry type.

The clutch pedal operates a master cylinder supplied by the fluid reservoir **2.**

When the clutch pedal is depressed the fluid under pressure actuates the piston in the cylinder **4** connected to the clutch release lever **6.**

The driven plate **9** is controlled by means of diaphragm spring **8.**

This type of clutch has the throwout bearing constantly in contact with the diaphragm spring. Thus no more clearance exists and the wear is automatically taken up.

No regular adjustment of the play is required.

Alfawiki.nl

1 Pedal

2 Clutch fluid reservoir

3 Master cylinder

4 Operating cylinder

5 Air bleed screw

6 Release lever

7 Throwout bearing

8 Diaphragm spring

9 Driven plate

Transmission ratios

1st	3.30 : 1
2nd	1.99 : 1
3rd	1.35 : 1
4th	1.00 : 1
5th	.79 : 1
Rev.	3.01 : 1

The transmission has 5 synchronized forward gears and one reverse.
The gearshift lever is floor mounted.

RM = Reverse
S = Synchronizer
F = Neutral

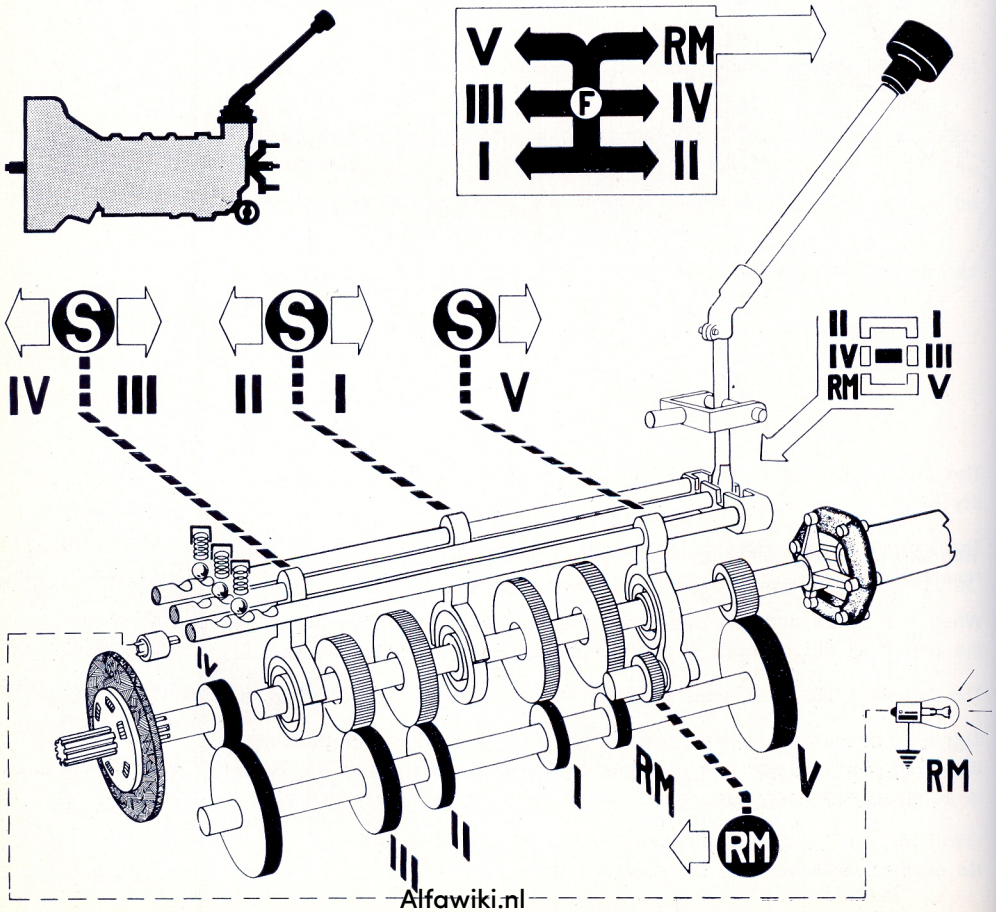

Alfawiki.nl

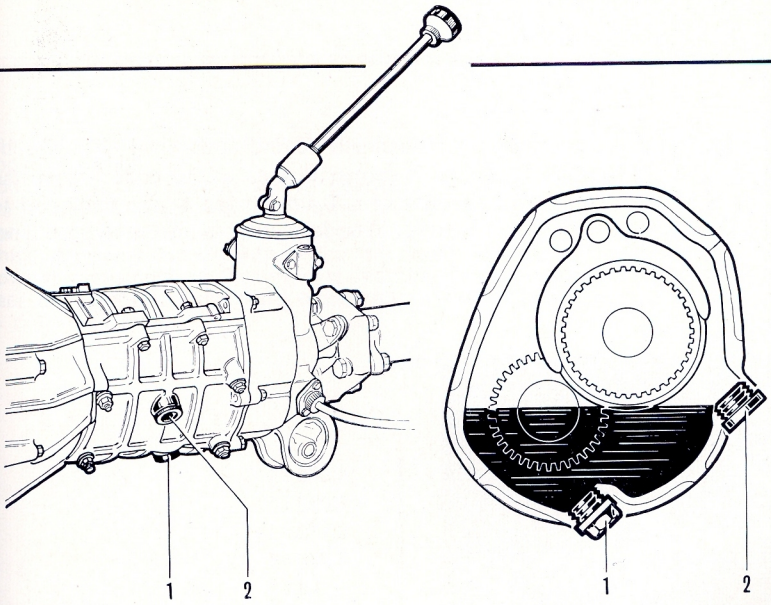

1 Drain plug.
2 Filler plug.
Check that transmission is full of oil to the bottom edge of the filler hole.
Any inspection or adjustment of the transmission must be done only by an **Alfa Romeo Dealer.**

DRIVE SHAFT

The drive shaft is in two sections and has an intermediate flexible support attached to the body.
The front section is provided with a rubber coupling at the transmission end; a universal joint is provided at each end of the rear section.

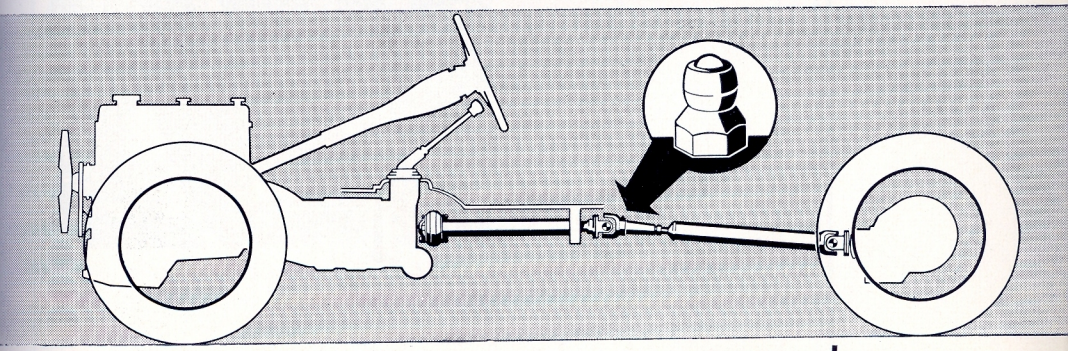

Grease the slip yoke at the scheduled intervals.

Alfawiki.nl

The live axle is attached longitudinally to the supporting structure by means of two trailing arms with rubber bushes at the ends; transverse attachment is effected by means of a T-arm hinged to the body and to the rear axle thru rubber bushes. The final drive is of the hypoid type.

Overall ratios with **41 : 9** final drive

1st	**15.049 : 1**
2nd	**9.055 : 1**
3rd	**6.172 : 1**
4th	**4.555 : 1**
5th	**3.603 : 1**
Rev.	**13.710 : 1**

Check oil level or change the oil at the prescribed intervals.

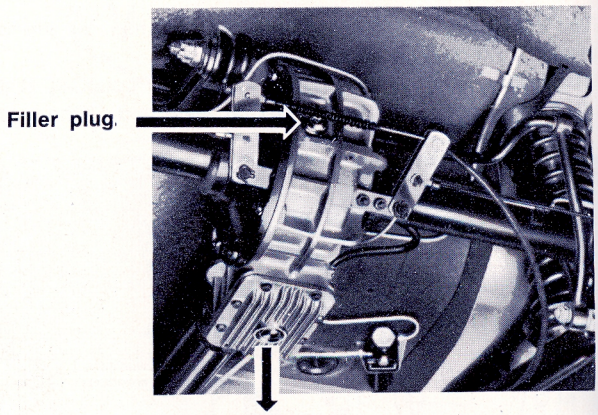

Check that differential is full of oil to the edge of the filler hole.

Alfawiki.nl

The front wheels are independently suspended and connected to the body by A-arms.
Coil springs and double-acting hydraulic telescopic shock absorbers are located between the lower arms and the body.
The suspension system is completed by a transverse stabilizer rod which improves the stability of the vehicle when cornering.
Upward movement of the arms is restricted by bumper pads situated near the springs. Downward movement is restricted by pads attached to the cross member.

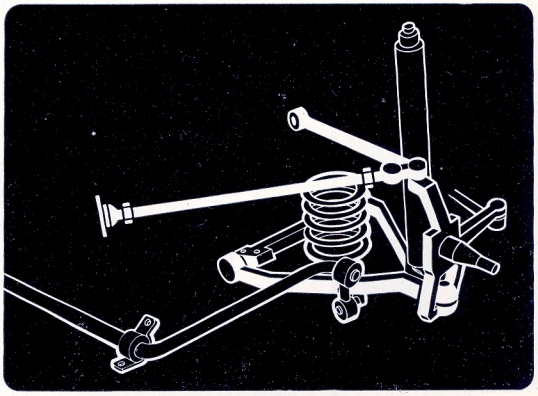

Suspension components require no regular lubrication. Whenever the damping action of the shock absorbers is uneven, have them checked by an Alfa Romeo Dealer.

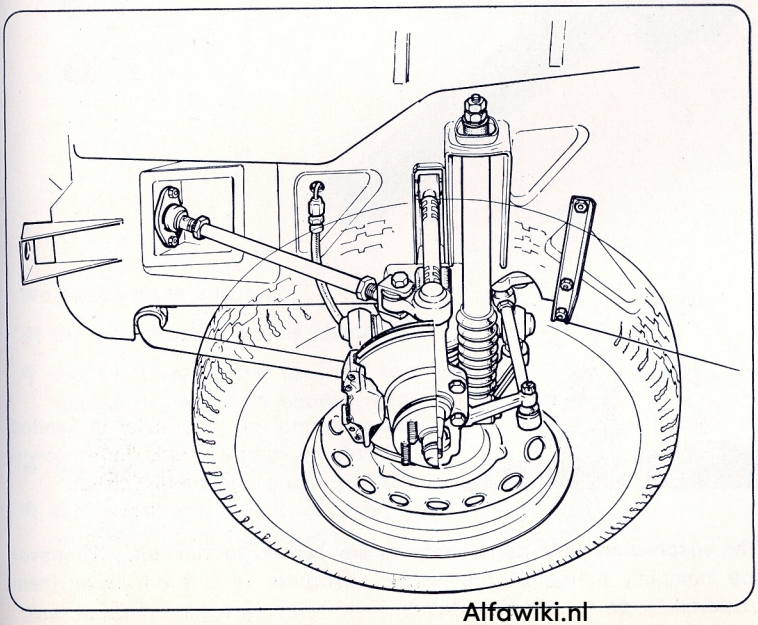

Alfawiki.nl

Chassis maintenance

The rear suspension consists of coil springs and large diameter tel scopic shock absorbers coaxial with the springs.
The suspension system is completed by a transverse stabilizer ro linked to the trailing arms and the body.

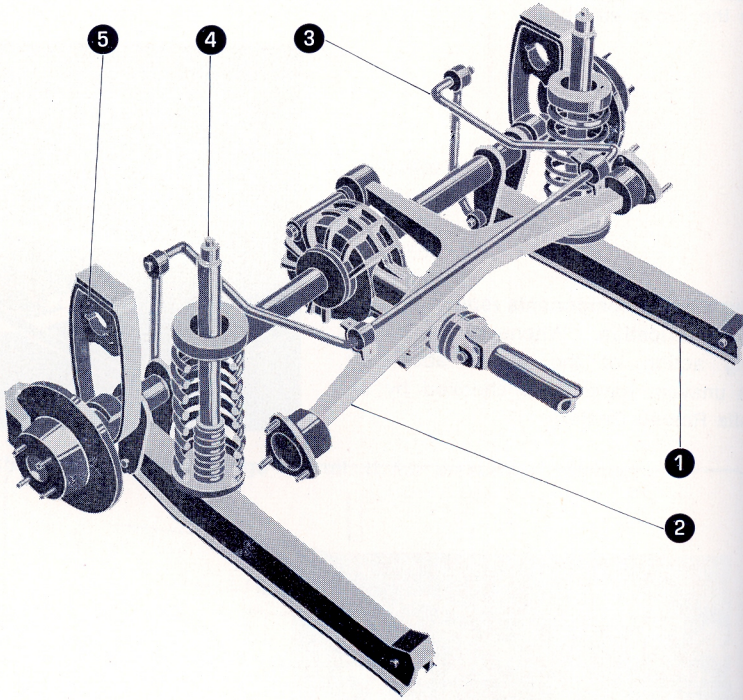

1 Trailing arm
2 T-arm
3 Stabilizer rod
4 Shock absorber
5 Rubber buffer and rebound strap.

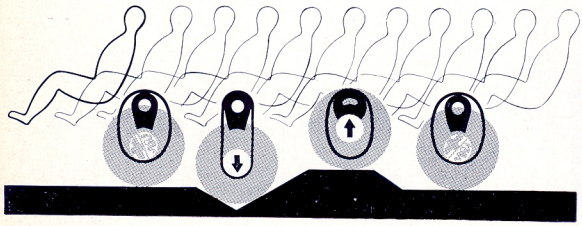

The rebound of rear axle is limited upward by rubber pads and downward by fabric and rubber straps.

The suspension units do not require any regular lubrication. Whenever the damping action of the shock absorbers is uneven, have them checked by an Alfa Romeo Dealer.

Alfawiki.nl

This model is produced alternatively with steering of the worm and roller or recirculating ball type.

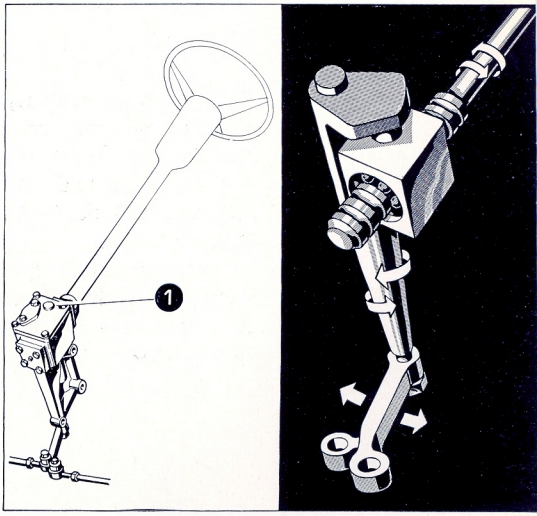

Recirculating ball steering.

At the prescribed intervals check:

- the oil level in the steering box (by removing the plug **1** shown in the figure);
- the steering linkage joints for play.

The steering of the recirculating ball type does not require any regular adjustment.

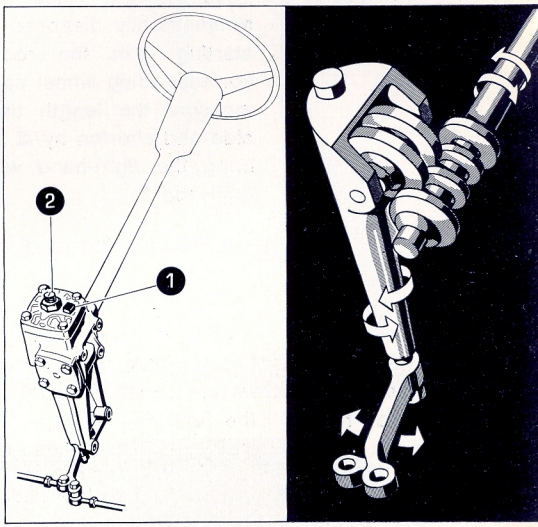

Worm-and-roller steering.

At the prescribed intervals check:

- the oil level in the steering box (by removing the plug **1** shown in the figure);
- the steering linkage joints for play;
- the worm and roller for play (adjust with screw **2,** if necessary).

The ball and socket joints of the rods **do not require any lubrication.**

Toe-in and camber

To avoid uneven and premature tire wear, and to ensure positive and stable steering, front wheel toe-in and camber must be set to the prescribed values.

Toe-in and camber vary according to the car load: the values should be checked with the car standing on level ground, with full pan, tank and radiator, with the tires inflated to the prescribed pressures, with spare tire and tools and with a load corresponding to that of four persons, i.e. about 620 lbs. for Berlina and 2 persons (310 lbs) for GT Veloce and Spider Veloce.
In order to obtain the correct results these checks should be carried out by specialized mechanics using suitable equipment.
It is recommended that this operation should be entrusted to an Alfa Romeo Dealer.

Toe-in adjustment

Lock steering wheel in the central position, i.e. with the spokes symmetrically disposed in relation to the vertical;
starting with the rod **1** on the steering box side, place the corresponding wheel so that the toe-in is **.06 in.;**
measure the length thus obtained of the rod on the steering box side and shorten by **.2 in.** the rod **2** on the other side;
bring the right-hand wheel to **.06 in.** toe-in by adjusting the center track rod **3;**

Length of track rods

As measured between ball joint centers, the length should fall within the following limits:

❶ ❷ **10.71 ± .3 in.** ❸ **21.26 ± .4 in.**

If these values cannot be restored, the cause will probably be attributable to distortion of the body resulting from a collision.

Alfawiki.nl

Camber

Non-adjustable; check chassis and supension arms for distortion, if necessary.

Turning circle

The turning circle may be adjusted by means of the screws **4** indicated in the figure below.

Camber	**B = A**	**+ .20"** **— .04"**
Toe-in	**C = D**	**+ .12"**

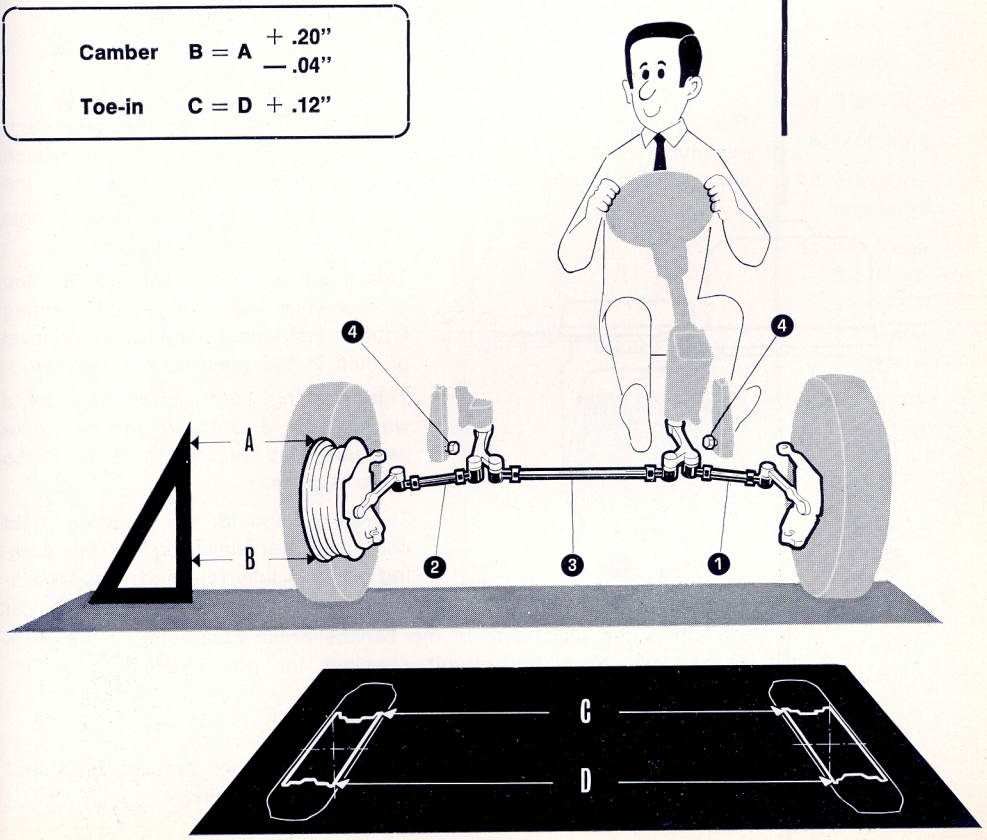

Dual brake system

The brake unit consists of a **dual power braking system.**

Each one of the separate circuits, front and rear, is servo assisted and controlled by a tandem master cylinder, with one cylinder operating the front brakes and the other cylinder the rear brakes.

The friction pads of the front and rear brakes are directly actuated by the cylinders integral with the calipers.

The brakes are self-adjusting.

A valve, inserted in the rear brake circuit, **regulates the pressure** between front and rear brakes to provide balanced braking action.

WARNING: the pressure regulator must never be tampered with; specifically, do not attempt to act on the adjusting nut as it is factory sealed.

The stop light switch is directly operated by the brake pedal.

The two brake reservoirs have suitable markings for maximum and minimum levels; the reservoirs are provided with a baffle, which prevents fluid from interflowing between each other; however, the reservoirs are replenished thru a single filler port common to both.

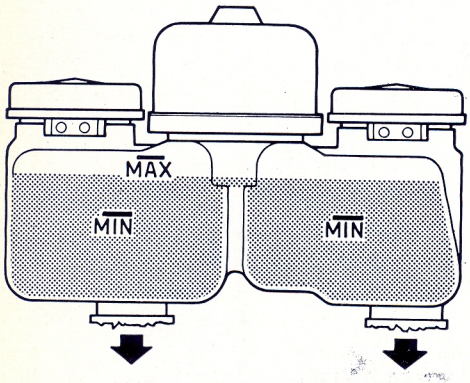

Two microswitches, located at the top of reservoirs, light up a red warning light on instrument panel when the level of fluid in the reservoirs is too low.

This warning light serves also as a warning for a drop in service brake pressure and for the parking brake when applied.

Therefore, should the warning light come on, first make certain the parking brake is fully released; if the warning light still remains on, stop the car and check the fluid level in the service brake reservoirs; if the level is too low, have the circuit checked for possible failure by an **Alfa Romeo Dealer.**

At the prescribed periods have the brake booster vacuum hose and connections checked for sound conditions and leaks.

Alfawiki.nl

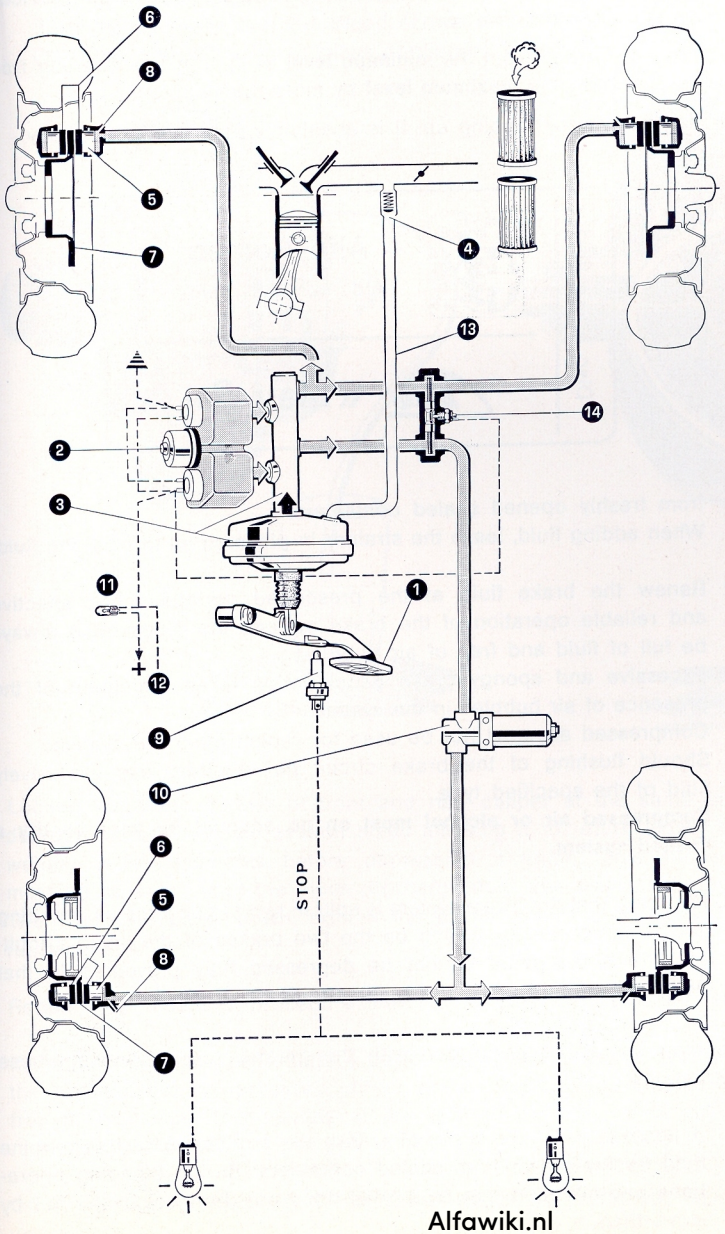

Dual brake system

1 Brake pedal
2 Fluid reservoirs (with warning light switches)
3 Power cylinder
4 Suction port
5 Pistons
6 Friction Pads
7 Discs
8 Bleed screws
8 Stop light switch
10 Pressure regulator
11 Warning light for fluid level, service brake pressure and parking brake
12 Connection for the switch of parking brake
13 Vacuum connection for booster
14 Pressure switch unit for brake pressure warning light

Alfawiki.nl

To maintain the brakes in good operating condition, follow the servicir instructions given below:

- Take care to prevent the **minimum level** of fluid in the reservoir fro falling below the **maximum level** by more than a quarter.
- For renewal or topping up, it is absolutely essential to use only

from freshly opened sealed containers.
When adding fluid, leave the strainer in place so as to filter the fluid

- Renew the brake fluid at the prescribed periods. For effective and reliable operation of the brake system, the pipes must always be full of fluid and free of air bubbles.
  Excessive and spongy brake pedal action is an indication of the presence of air bubbles in the system.
  Compressed air must not be used for replenishing the system.
  Should flushing of the brake circuit be required, use exclusively fluid of the specified type.
  Compressed air or alcohol must on no account be used to dry a flushed system.

Air bleeding

NOTE: being that the brake system is split in two circuits, the air bleeding cannot be performed by acting on the two brakes of the same circuit; in fact, the brake pedal cannot be depressed fully prevented in that by the pressure built up in the other circuit.

Bleeding should be performed with the greatest care following these instructions:

1 If necessary, fill the reservoirs, thru the strainer, with the genuine fluid freshly drawn from sealed containers; during bleeding operations pay attention that fluid level does not drop below the full by more than a quarter.

Alfawiki.nl

2 Jack up a side of the car and remove both wheels.
Push rubber pipes over the bleed screws of front and rear caliper; the other end will lead to glass containers half full of fluid.

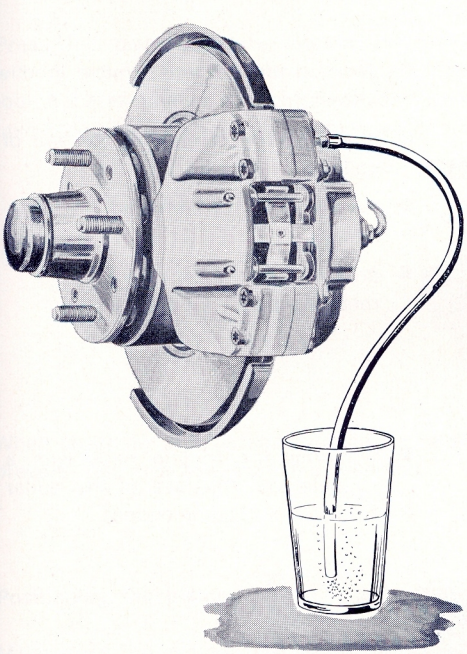

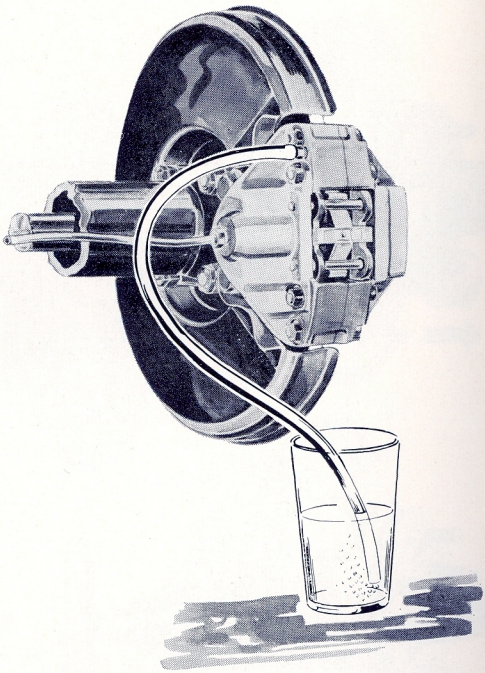

Loosen the bleed screws of front and rear caliper at the same time; depress the brake pedal several times allowing it to return slowly and waiting a few moments before depressing it again. This sequence must be repeated until the pipes discharge fluid free from air bubbles. Then hold the pedal down, tighten the bleed screws and remove the rubber pipes.

Repeat the bleeding procedure for the wheels at the other side.

If the bleeding has been carefully performed, it will be found that when the brake pedal is depressed, direct action on the fluid can be felt, free of resilience, immediately at the end of the free travel. If not, repeat the procedure.

On completion of bleeding, fill up the reservoir to maximum level, if necessary.

Alfawiki.nl

Friction pad inspection

At the prescribed intervals check front & rear pads for wear. Proceed as follows:

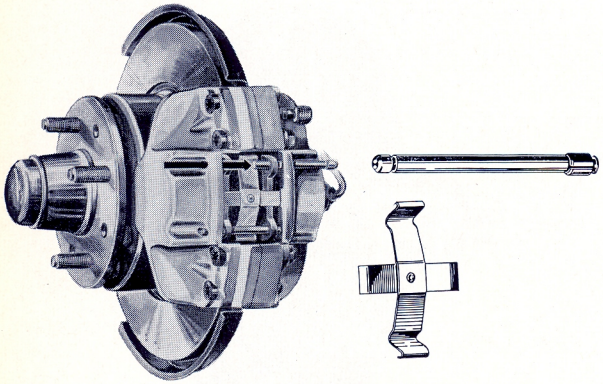

- Jack up the car and remove the wheels;
- drive the upper retaining pin out of caliper;
- remove the cross-shaped spring;
- drive out the lower retaining pin.

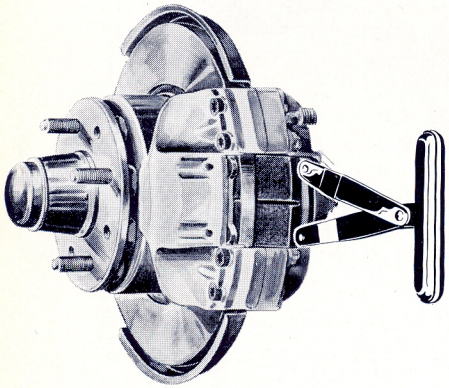

- Withdraw the friction pads with a suitable tool (the use of the puller **A.2.0150** is recommended).

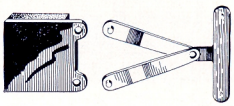

- Check pad thickness

Thickness:
new
.6 in.

wear limit
.28 in.
REPLACE PADS

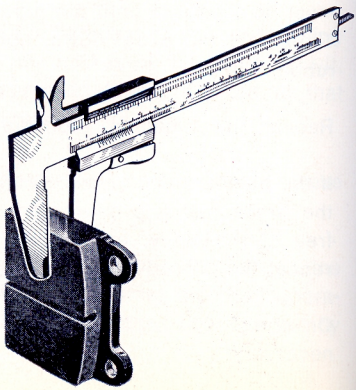

CAUTION:

In case of uneven wear of pads, it is advisable to replace the whole set (front or rear).

Alfawiki.nl

Pad reassembly

Clean the pad surface: never use mineral base solvents or sharp-edged tools; check that dust excluder and retaining ring are sound; if not, replace them.

Press the pistons to the bottom of cylinders with a suitable device (the use of the special tool **A.2.0147** shown at right is recommended); take care not to damage the pistons or the discs.

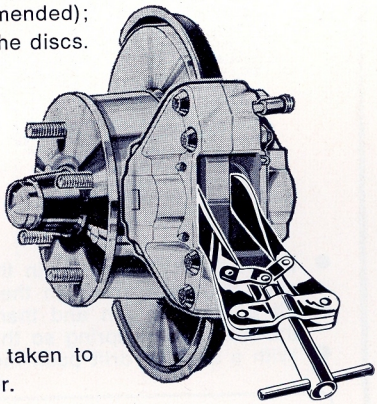

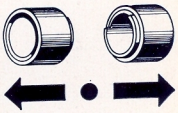

When resetting pistons care should be taken to prevent fluid overflow from the reservoir.

Positioning the pistons

Make sure the pistons are correctly positioned in the caliper by resting the template against the reference surface as shown.

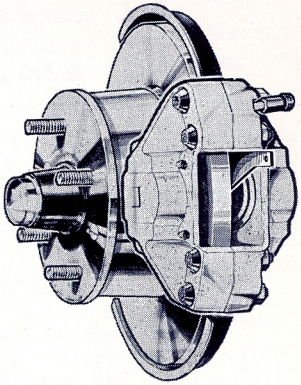

A.2.0149 template for rear brakes.

A.2.0160 template for front brakes.

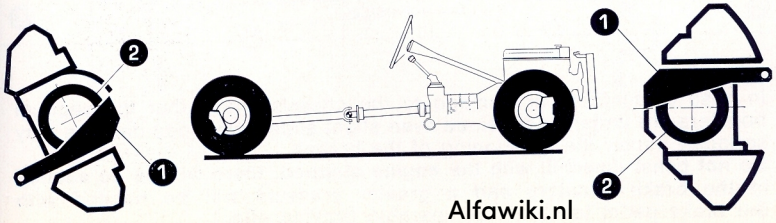

1 Template
2 Piston

Alfawiki.nl

Pad reassembly (continued)

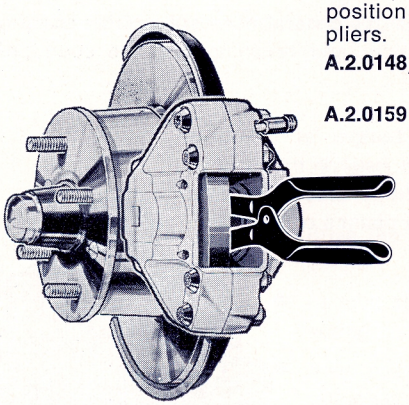

If the pistons are not in the correct position rotate them with the special pliers.

A.2.0148/1 special pliers for rear brakes.

A.2.0159 special pliers for front brakes.

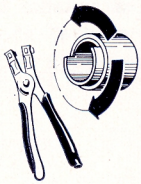

- Insert the friction pads in the caliper; if new pads are fitted, make sure they slide freely in their housing.
- Fit a retaining pin and then the cross-shaped spring; press down the free end of spring so that the other retaining pin can be fitted.
- With a suitable drift push the retaining pins fully home.

When refitting the pads, check the conditions of cross-shaped springs and upper & lower retaining pins and replace, if necessary; however, **these parts must be replaced whenever new pads are fitted.**

Cleaning instructions

To clean the outside of brake assemblies use suitable detergents mixed with hot water; then thoroughly dry all components with compressed air.
Never use gasoline, trichloroethylene or similar solvents to clean the outside of brakes as these substances are detrimental to the rubber seals.
While servicing the car, be careful not to let lubricants come in contact with the discs and friction pads.
When cleaning the car, it is advisable to mask off the brakes to avoid damaging the brake components with jets of water.

Important warning

In case of accident or damage to the chassis check that the vacuum boosters are undamaged, since even slight superficial body damage may seriously impair the functioning of the brakes.
Do not coast downhill with the engine stopped; there will be no suction in the brake boosters, and a greater pressure will be needed with the brake pedal to obtain comparable braking effect.

Alfawiki.nl

Parking brake

The parking brake is mechanically-operated; the rear wheels are locked thru shoes **4** acting against a drum machined in the disc casting. Pulling the lever causes the shoes, via the operating lever **2**, to expand thus locking the wheels. The slack adjuster **6** allows to take up any slackening in the linkage. If an excessive running clearance is the cause for linkage slackening, the shoes can be adjusted by means of the running clearance adjusters **5.** When the parking brake is applied, a warning light on the instrument panel comes on to indicate that this has been done.

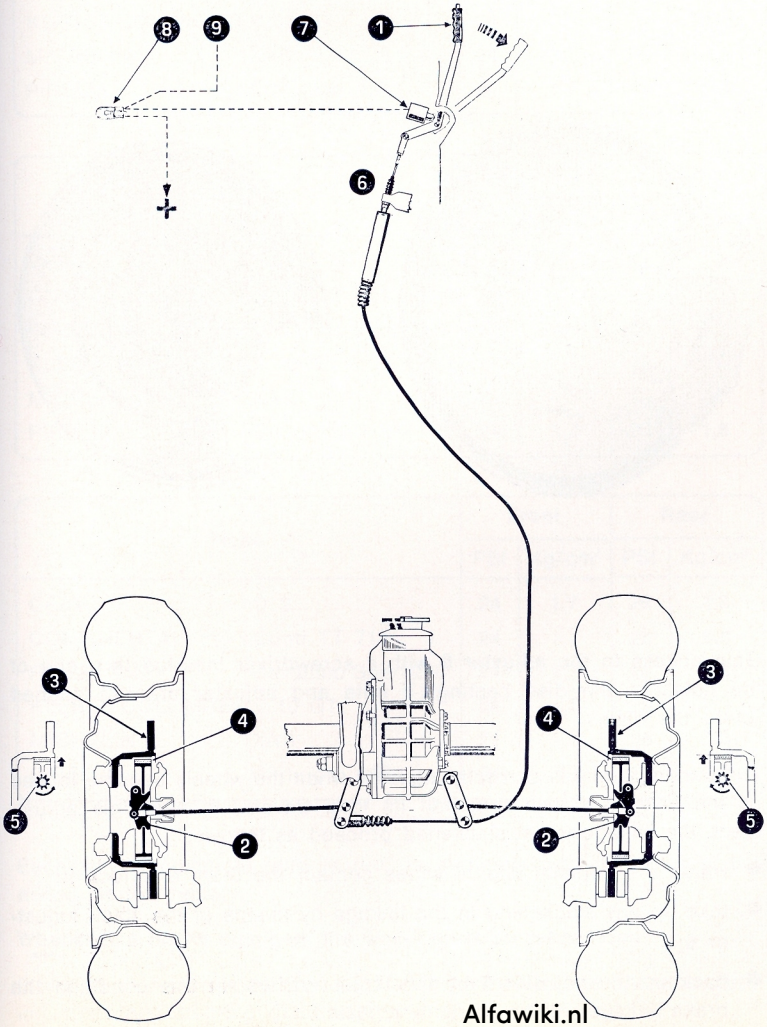

1 Hand lever

2 Operating levers

3 Discs

4 Shoes

5 Running clearance adjuster

6 Slack adjuster

7 Parking brake warning light switch

8 Warning light for fluid level, service brake pressure and parking brake

9 Electrical connection to brake pressure switch unit and fluid level switches

Alfawiki.nl

Parking brake linkage adjustment

A slack parking brake linkage, due to worn shoe linings, is adjusted as follows, one wheel at a time:
jack up the car and remove the wheel; fully release the brake and make sure the control cables to the calipers are slackened; act on the running clearance adjuster **5** one notch at a time in the direction shown in the figure until shoes just contact the drum, then back up the adjuster by two-three notches so that the disc rotates freely.

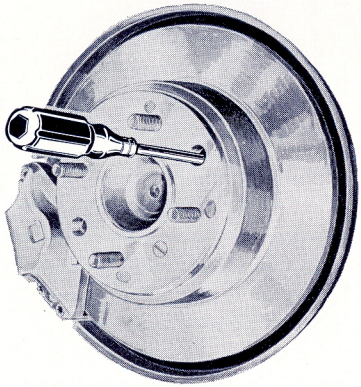

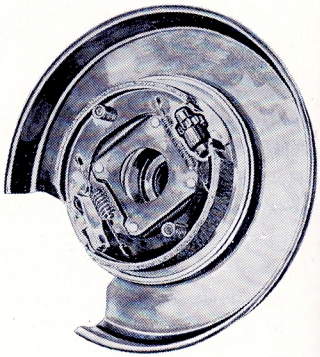

Gain access to the adjuster **5** with a screwdriver inserted thru one of the holes in the disc casting: if hole and adjuster are not aligned rotate the disc.

The parking brake is correctly adjusted when the wheels become locked as the lever is drawn thru half its total travel. If, after this adjustment, the linkage is yet slackened proceed as follows:

- rotate the adjuster **5** until shoes contact the drum and lock it;
- take up any slackening in the linkage by means of the slack adjuster **6;**
- back up the adjuster **5** by two-three notches; in this condition the brake linkage will be correctly adjusted.

Alfawiki.nl

Tires

RECOMMENDED TIRE PRESSURE (COLD) (under all conditions)

Make		Front		Rear	
		PSI	Kg/cm²	PSI	Kg/cm²
CEAT	D 2	24	1,7	26	1,8
CONTINENTAL	Conti TT 714	24	1,7	26	1,8
FIRESTONE	Cavallino Sport 200	24	1,7	26	1,8
KLEBER COLOMBES	V 10 GT	24	1,7	29	2
MICHELIN	XAS	24	1,7	26	1,8
PIRELLI	Cinturato HR	24	1,7	26	1,8

165 HR 14

Make		Front		Rear	
		PSI	Kg/cm²	PSI	Kg/cm²
CEAT	D 2	24	1,7	26	1,8
CONTINENTAL	Conti TT 714	24	1,7	26	1,8
FIRESTONE	Cavallino Sport 200	24	1,7	26	1,8
KLEBER COLOMBES	V 10 GT	24	1,7	29	2
MICHELIN	XAS	21	1,5	26	1,8
PIRELLI	Cinturato HR	24	1,7	26	1,8

165 HR 14

Make		Front		Rear	
		PSI	Kg/cm²	PSI	Kg/cm²
CEAT	D 2	24	1,7	26	1,8
CONTINENTAL	Conti TT 714	24	1,7	26	1,8
FIRESTONE	Cavallino Sport 200	24	1,7	26	1,8
KLEBER COLOMBES	V 10 GT	24	1,7	29	2
MICHELIN	XAS	21	1,5	26	1,8
PIRELLI	Cinturato HR	24	1,7	26	1,8

165 HR 14

Wheel balancing

Each wheel, complete with is tire, is statically and dynamically balanced at the factory.

Whenever a tire is changed, the wheel must be rebalanced.

It should be remembered that unbalanced wheels cause unstable steering, abnormal steering gear wear and uneven tire wear.

Alfawiki.nl

Tire inflation pressure

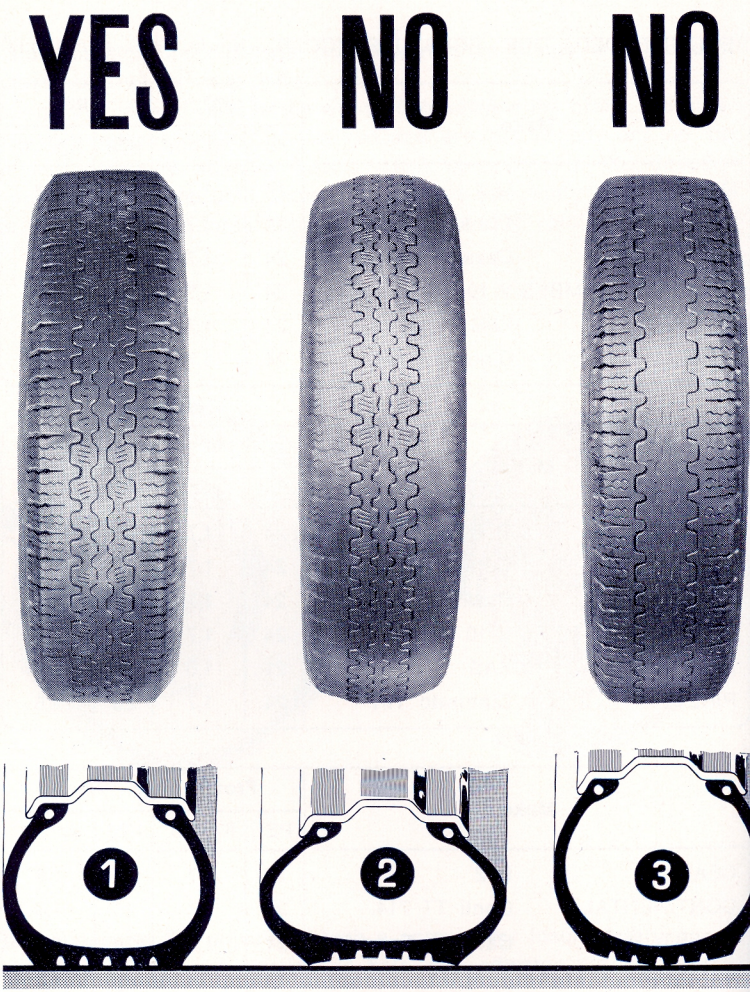

Correct

❶ The tire gives optimum performance, the tread works over its entire width, thus ensuring **uniform tire wear and long life.**

Too low

❷ The tire will overheat: **the sides of the tread will wear quickly** and the **tire plies will tend to separate.**

Too high

❸ Riding comfort will be reduced, and the tire will suffer **from excessive wear in the center of the tread and vulnerability to knocks.**

Alfawiki.nl

Changing over

To ensure even and uniform tire wear and long tire life, front and rear wheels and the spare should be changed over regularly.

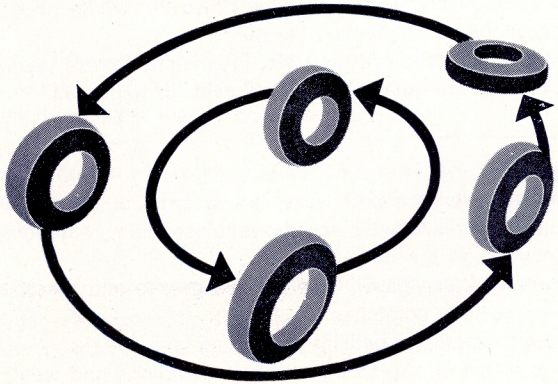

Michelin diagram

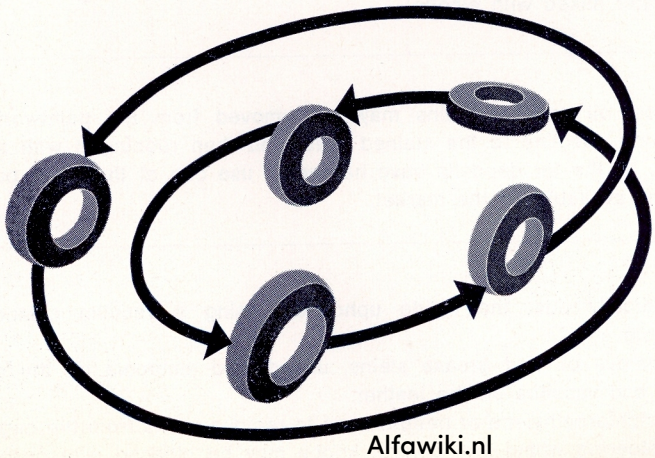

Pirelli diagram

Alfawiki.nl

Body maintenance

Washing the car

The body should be washed frequently, depending on the use of the car, the environmental conditions and the state of the roads. Moreover the lighter is the finish paint shade the more frequent the car should be washed.

Avoid washing the car in the sun and proceed as follows:

- first flush the car all over with jets of water to remove the dust;
- prepare a solution of suitable detergent in water (2% in weight);
- with the solution and a sponge wipe down the whole body;
- rinse thoroughly with plenty of water;
- dry with compressed air, if possible, then with chamois leather.

Note: for cleaning the outside of brakes refer to page **100.**

Polishing

To put fresh gloss on the paintwork, polish once or twice a year with a polish suitable for synthetic or nitrocellulose paint, according to the type of paintwork on the car.

On the chromework use gasoline to remove grease and a suitable compound to take out any scratches.

Use only woollen cloth for polishing.

Do not use gasoline or solvents on rubber mouldings and weatherstrips.

When refuelling or lubricating, be careful not to splash gasoline or hydraulic fluid on the paintwork.

Cleaning the windows

Use only a very soft cloth or chamois leather for cleaning the windshield and windows. If the panes are very dirty, use windshield washer fluid or water mixed with alcohol.

Removing stains

Grease, oil and tar stains may be removed from the paintwork by applying gasoline to the stained area, and then rubbing it with a dry cloth. If the tar deposits have hardened, use one of the many preparations available on the market.

Upholstery

Periodically dust the inside upholstery using a vacuum cleaner if possible.

To remove oil and grease stains, use diluted ammonia on the cloth parts and vaseline on the leather.

Use trichloroethylene or neutral soap to remove stains from the carpets.

The steering wheel and control knobs may be cleaned with gasoline.

Alfawiki.nl

Laying the car up

If the car will be left unused for any length of time the following protective steps should be taken:

- add engine oil to the fuel in the tank in such quantity as to get a **2-3** per cent mixture, then run the engine at idle for about **5** minutes to protect the fuel feed system.
- empty the fuel tank; clean the oil filter and the main fuel filter:
- inject a little engine oil into the cylinders thru the spark plug holes and rotate the crankshaft by hand several times in order to spread a film of oil over the cylinder walls;
- remove the battery, store it away from frost, and recharge it once a month; never allow it to become fully discharged or plate sulfation will result;
- jack up the car, clean the tires and slightly deflate them;
  if tires are removed, dust them internally (and their tubes) with talcum powder; store them in a dark and airy but dry place;
- dust the seats and upholstery with moth preventive;
- cover the car with a dust sheet. To avoid serious damage to the paintwork, do not use polyvinyl-type tarpaulins.

Alfawiki.nl

Electrical system

The 12-volt electrical system is wired with protected and insulated cable in order to reduce to a minimum the risk of short circuiting. The negative battery terminal is grounded.
If any instrument fails to operate or any lamp fails to light up, first check the corresponding fuses; if the fuse is sound check to ensure that the cable terminals are tight and that the bulbs are not loose or burnt out.
If the trouble persists, the electrical system should be checked by a competent auto-electrician.

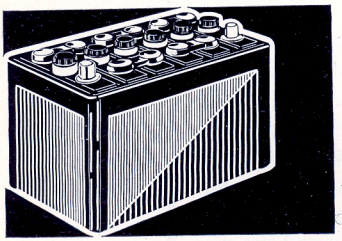

BATTERY

Water level
The battery water level should never be more than 3/16" above the plates and must never leave them uncovered.
When filling up the battery, use only distilled water; never add acid.

Terminals
Make sure that terminals are tight and are sufficiently coated with pure vaseline.

State of charge
The state of charge can be checked by measuring the specific gravity of the electrolyte with a suitable hydrometer.
The specific gravity/charge ratio is as follows:

specific gravity	1.28 . . . . (32°Bé)	= **charged**
	1.23 . . . . (27°Bé)	= **half charged**
	1.11 - 1.14 (15° - 18°Bé)	= **discharged**

If distilled water has been added to a battery, the specific gravity should not be measured until mixing is complete; to facilitate mixing, charge the battery for 30 minutes.
In climates where the temperature is nearly always above 85°F, the specific gravity of the electrolyte, when the battery is fully charged, must be lower than the normal figure, viz. 1.21 (25°Bé).

Alfawiki.nl

Alternator

The alternator requires some special cares.

- **It should not be tampered with.**
- Never disconnect the battery terminal of alternator-to-battery cable while the engine is running.
- When recharging the battery, completely disconnect it from the system.
- When electric weldings are carried out on car, disconnect battery making sure the positive terminal is properly insulated.
- Never reverse the battery polarity or the diodes will be damaged.
- To avoid overloading the bearings, check frequently the belt for proper tension.
- It is recommended to entrust any inspection or repair work to **Alfa Romeo Dealers.**

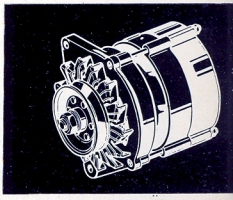

Starter

Regularly:

Inspect commutator and brushes.

The brushes must be clean and must slide freely in their holders: brush working face must be cleaned with a cloth soaked with gasoline; the brush spring must apply effective pressure.

When one brush has to be replaced, it is a good rule to replace the other at the same time. Always fit new original brushes of the prescribed type.

After replacing the brushes, run the starter with no load and for such time as is necessary to bed the brush working face to the commutator.

If the commutator is burned or elongated, it must be reworked on a lathe taking care to decrease the diameter of the minimum required only: after machining, undercut the mica between the segments.

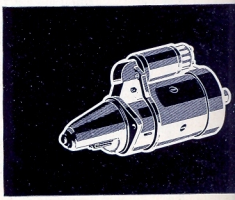

Alfawiki.nl

Replacing a lamp

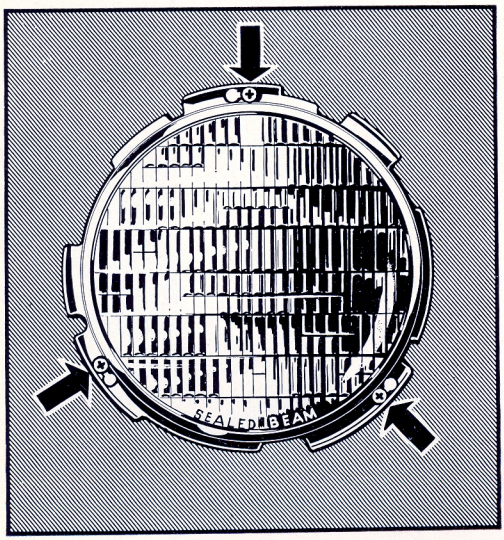

Headlamps
Fog lamps (Berlina & GT Veloce)

Remove the rim by pulling it off from the bottom (on Spider Veloce first loosen the screw at the lower edge of rim).
Slacken the three screws on the lens retaining ring and remove the ring.

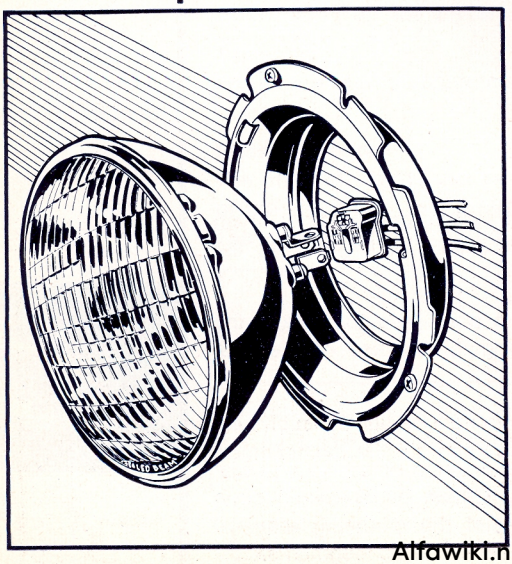

Rotate the lens unit counterclockwise and withdraw it.
Disconnect the wire junction.

Alfawiki.nl

Replacing a bulb

Parking & stop lights.
Direction indicators & Emergency flashers.
Back-up & license plate lights.
Loosen the attaching screws and remove the lens.

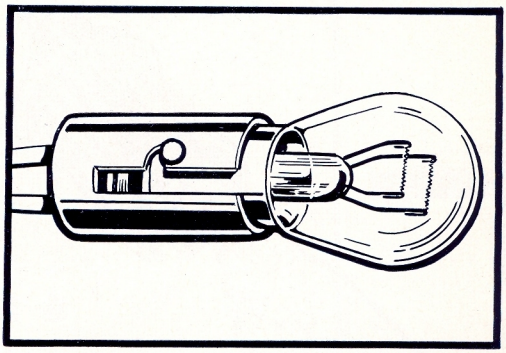

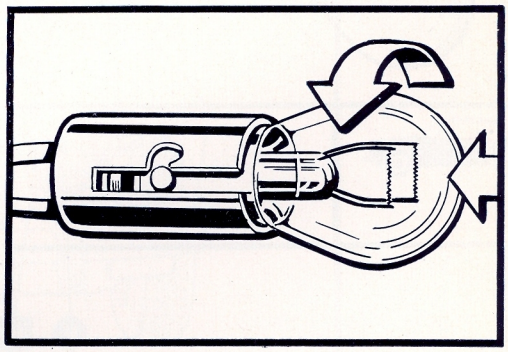

Push in the bulb and rotate counter-clockwise...

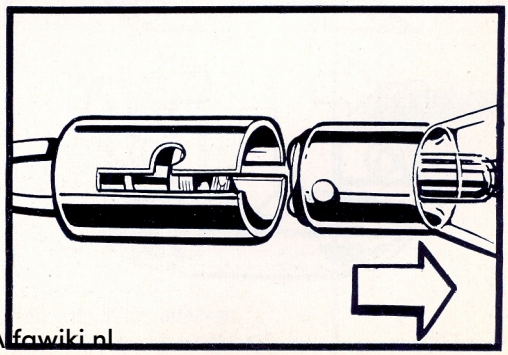

.. to withdraw it.

Alfawiki.nl

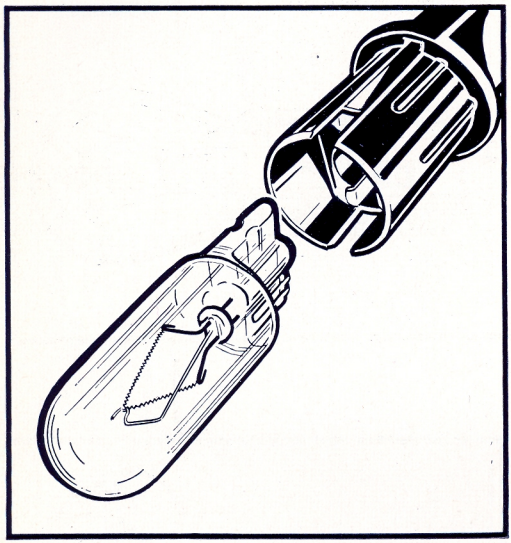

Side marker lights

At the front, gain access to the marker lights from the bottom of fenders by removing the access port cover; at the rear, from the inside of trunk. Take out the lamp holder and withdraw the bulb.

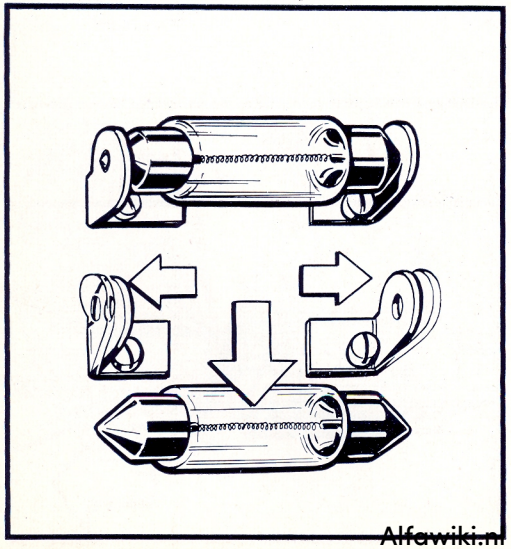

Alfawiki.nl

Courtesy lights

Remove the lens of dome light by loosening the screw at the side and free the bulb from the clips.
On **Spider Veloce** the light is in the rearview mirror: withdraw the lens from mirror body and remove the bulb.

Glove box light
Trunk light
Engine compartment light.

Free the bulb from the clips.

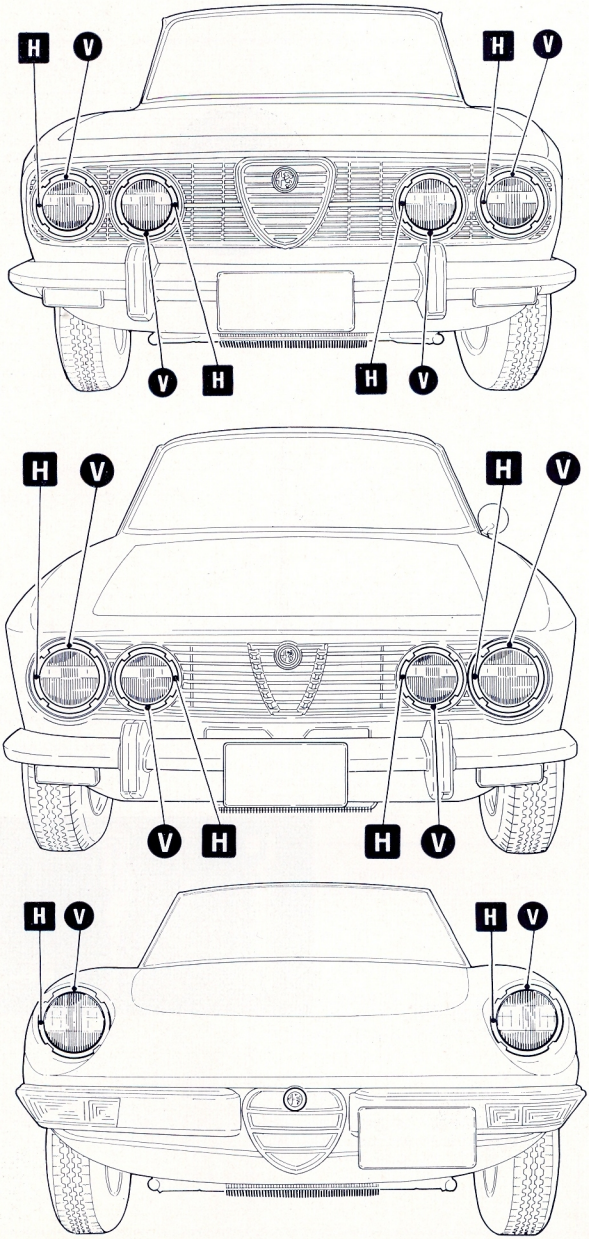

To set the headlamp beam, act properly on the adjusting screws.

V Vertical adjustment **H** Horizontal adjustment

Alfawiki.pl

In the trunk there are:

- Spare tire under the mat

- Jack

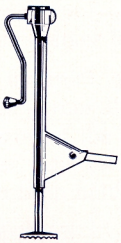

- Tool kit, containing:

— Box spanner for plugs

— Screwdriver

— Phillips screwdriver

— Wheel brace
(use it also as tommy bar for box spanner)

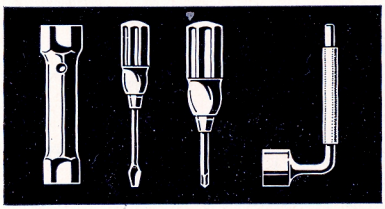

Alfawiki.nl

Engine trouble diagnostic chart

SYMPTOM	POSSIBLE CAUSE	CORRECTION
Low fuel pressure warning light does not flash on when ignition key is turned.	Fuse no. **6** blown. Warning light bulb burned out.	Replace fuse. Replace bulb.
Low fuel pressure warning light stays on (fuel pump operates: a light buzzing can be heard).	Fuel tank emply. Fuel pump outlet pressure too low (warning light comes on while running at high speed). Relief valve of liquid/vapor separator stuck closed (in winter).	Refuel it. Replace tank fuel filter and main filter element. Remove valve and check it for proper operation; replace, if necessary. (See page 73).
Low fuel pressure warning light stays on (fuel pump fails to operate).	Fuse in the additional fuse holder blown.	Replace fuse.
Unsatisfactory road performance.	Air induction clogged. Relief valve of liquid/vapor separator stuck closed (in winter).	Check and replace air cleaner elements, if necessary. Remove valve and check it for proper operation; replace, if necessary. (See page 73).
Unsatisfactory driveability: hesitations.	Temperature setting lever improperly positioned. Fuel pump outlet pressure too low (warning light comes on while running at high speed). Relief valve of liquid/vapor separator stuck closed (in winter).	Position the lever correctly. Check and replace, if necessary, tank fuel filter and or main filter element. Remove valve and check it for proper operation; replace, if necessary. (See page 73).
Detonations in the exhaust pipe on deceleration.	Fuse n. **6** blown. Loose junction of fuel cut off device feed wire disconnected. Feed wire disconnected at fuel cut-off solenoid.	Replace fuse. Re-connect junction. Re-connect wire.
Idle too slow but even.	Idle air equalizer out of adjustment (adjuster too much screwed in).	Unscrew the adjuster (with a coin) until a faster but again even idle is obtained. (See page 77).
Idle too slow and rough.	Idle air hose(s) disconnected from equalizer or throttle throat fittings or even obstructed or damaged.	Connect, clear or replace hose(s) respectively. (See page 77).
Idle too fast and rough.	Idle air equalizer out of adjustment (adjuster too much screwed out). Air seeping into an idle air hose.	Screw in the adjuster (with a coin) until an even idle is obtained. (See page 77). Check idle air hose for sound condition and replace if necessary. (See page 77).

If the fault cannot be traced and remedied, entrust the inspection and repair to an **Alfa Romeo Dealer.**

Alfawiki.nl

2000 BERLINA

DEVICES

3 Ignition distributor . . (Marelli S.103 B)
4 Coil . . . . . (Marelli BZR 2000 D)
6 Oil pressure gage sender
7 Coolant thermometer sender
8 Low fuel pressure warning light switch
9 Service brake pressure warning light switch
10 Low oil pressure warning light switch
12 Fuel cut-off solenoid
13 Alternator — Bosch K 1 14 V 45 V 22 / Motorola S.E.V. MARCHAL A.14.45/ 55.712 70 702
14 Cold start device solenoid
15 Starter . . . . . (Bosch EF 12 V 0,7 PS)
16 Battery . . . . . 12 V 60 Ah
17 Horn
18 Brake fluid level warning light switches
19 Junction boxes and connectors
20 Voltage regulator — Bosch AD 1 14 V / Motorola S.E.V. MARCHAL 14 V
21 Horn relay
27 Windshield wiper (two speed)
28 Blower motor (two speed)
29 Instrument panel connectors
48 Dimmer for HAZARD, DEF, WIPE lights and heater control panel light
49 Heated rear window relay
50 Key-reminder buzzer
51 Safety belt buzzer
52 Flasher unit
60 Cigarette lighter
68 Fuseboxes
75 Heated rear window
76 Electric fuel pump
77 Fuel level sender

SWITCHES

1 Engine compartment light
5 Back up light and safety belt
11 Microswitch
42 Glove compartment light
46 Emergency flashers
53 Stop lights
54 Hand throttle warning light
55 Windshield washer, foot operated
56 Heated rear window
58 Blower
62 Windshield wiper
63 Parking brake warning light
64 Ignition and starting
65 Horn control
66 Parking lights, headlamps and flashing
67 Direction indicators
69 Switch for FASTEN SEAT BELTS light and buzzer (at passenger's side)
70 Belt retractor (passenger's side)
71 Belt retractor (driver's side)
72 Courtesy light (microswitch on door jambs and toggle switch)
74 Key-reminder buzzer
78 Trunk light

BULBS

2	Engine compartment light	
23	Front direction indicators-emergency flashers and parking lights	5/21 W
24	Headlamp Hi/Low	Sealed beam
25	Headlamp Hi	Sealed beam
26	Side marker lights	3 W
30	Instrument lights	
31	Fuel reserve warning light	
32	Direction indicators warning light	
33	Warning light for fluid level, service brake pressure and parking brake	
34	Blower warning light (two brightness levels)	
35	Low fuel pressure warning light	
36	Alternator warning light	
37	Parking light warning	
38	High beam warning light	
39	Hand throttle warning light	
40	Low oil pressure warning light	
41	FASTEN SEAT BELTS light	
43	Glove compartment light . .	5 W
44	Heater control panel light	
45	HAZARD light	
47	Emergency flashers pushbutton warning light	
57	Heated rear window pushbutton warning light	
59	DEF light	
61	WIPE light	
73	Courtesy light	5 W
79	Trunk light	5 W
80	Rear direction indicators and emergency flashers	21 W
81	Rear parking and stop lights .	5/21 W
82	Back-up lights	21 W
83	License plate lights	3 W

CABLE COLOR CODE

A	blue	V	green
B	white	Z	violet
C	orange	AB	blue/white
G	yellow	AN	blue/black
H	grey	BN	white/black
M	brown	GN	yellow/black
N	black	HN	grey/black
R	red	RN	red/black
S	pink	VN	green/black

The figure following the color code on the diagram shows the wire gauge in mm^2.
Where not shown the wire gauge is 1 mm^2.

PLATE ON FUSEBOX

1, 2, 3, 4 Main devices
5 Parking lights
6 Indicating devices
7 L.H. high beam
8 R.H. high beam
9 L.H. low beam
10 R.H. low beam

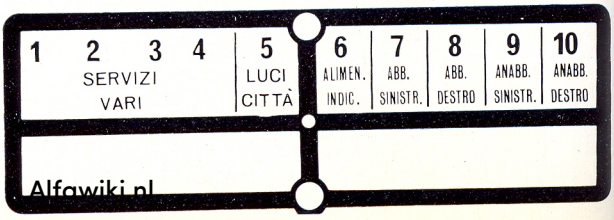

Alfawiki.nl

Wiring diagram

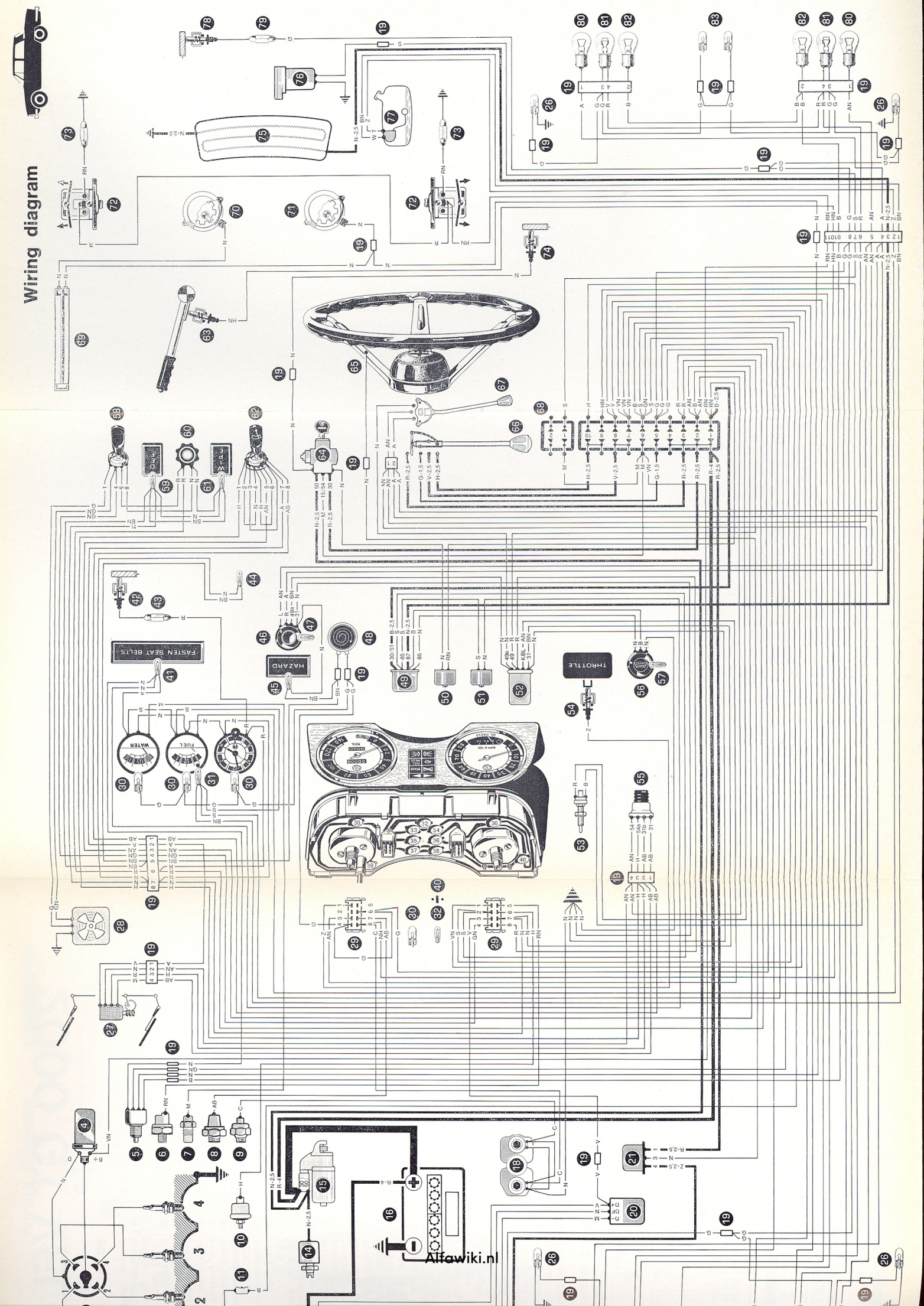

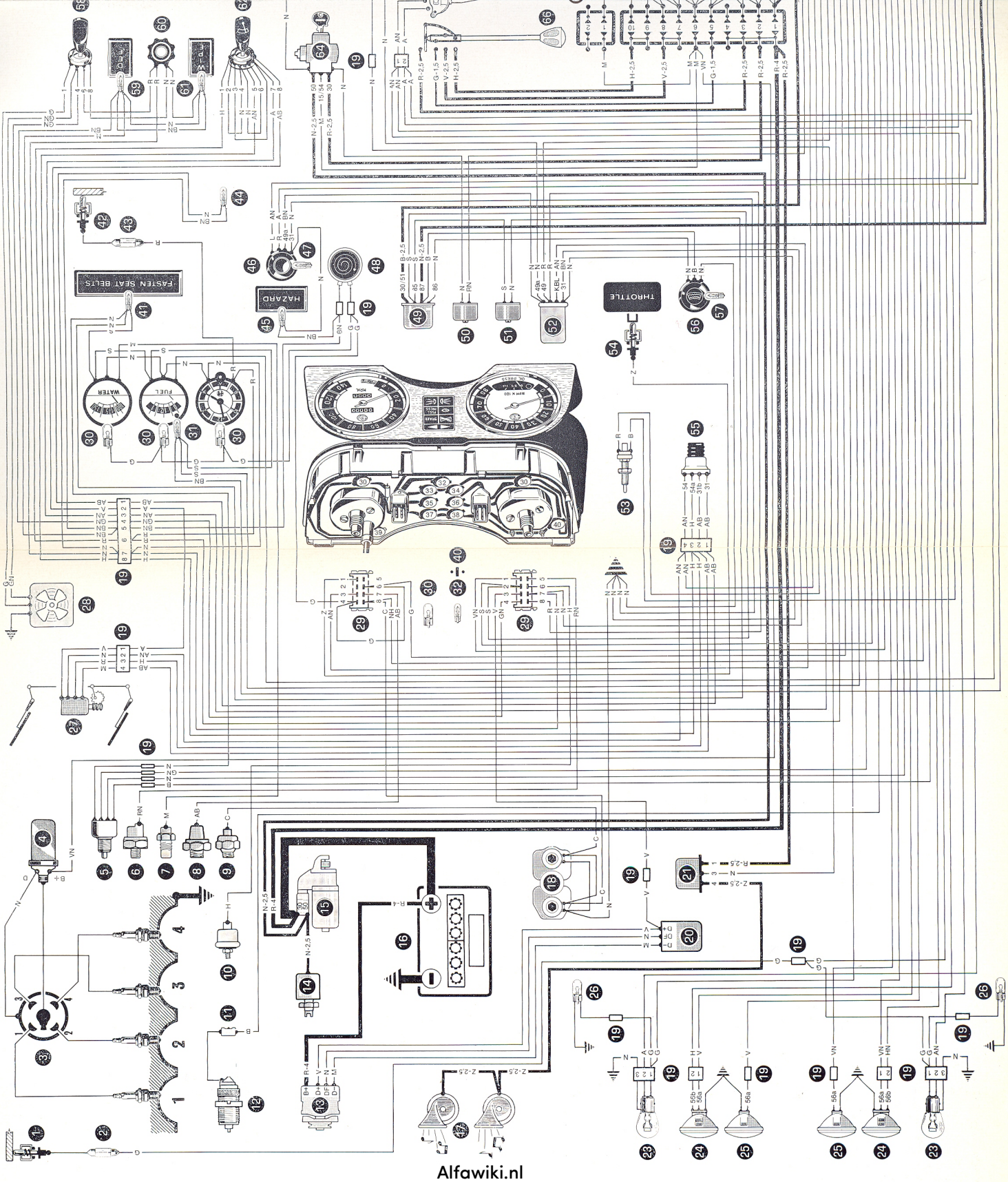

Alfawiki.nl

2000 GT VELOCE®

DEVICES

3 Ignition distributor . . (Marelli E.103 B)
4 Coil . . . . . (Marelli BZR 2000 D)
6 Oil pressure gage sender
7 Coolant thermometer sender
8 Low fuel pressure warning light switch
9 Service brake pressure warning light switch
10 Low oil pressure warning light switch
12 Fuel cut-off solenoid
13 Alternator { Bosch K1 14 V 45 V 22 / Motorola S.E.V. MARCHAL A.14.45/ 55.712 70 702
14 Cold start device solenoid
15 Starter . . . . . (Bosch EF 12 V 0,7 PS)
16 Battery . . . . . 12 V 60 Ah
17 Horn
18 Junction boxes and connectors
19 Brake fluid level warning light switches
20 Voltage regulator { Bosch AD 1 14 V / Motorola S.E.V. MARCHAL 14 V
21 Fog lamp relay
22 Horn relay
28 Windshield wiper (two speed)
29 Blower motor (two speed)
30 Instrument panel connectors
47 Dimmer for HAZARD, DEF, WIPE lights and heater control panel light
48 Heated rear window relay
49 Key-reminder buzzer
50 Safety belt buzzer
51 Flasher unit
62 Cigarette lighter
70 Fuseboxes
78 Heated rear window
81 Electric fuel pump
82 Fuel level sender

SWITCHES

1 Engine compartment light
5 Back up light and safety belt
11 Microswitch
43 Glove compartment light
46 Fog lamp
52 Emergency flashers
56 Heated rear window
57 Stop lights
58 Windshield washer, foot operated
59 Hand throttle warning light
60 Blower
64 Windshield wiper
65 Parking brake warning light
66 Ignition and starting
67 Horn control
68 Parking lights, headlamps and flashing
69 Direction indicators
71 Switch for FASTEN SEAT BELTS light and buzzer (at passenger's side)
72 Belt retractor (passenger's side)
73 Belt retractor (driver's side)
74 Courtesy light (microswitch on door jambs)
75 Key-reminder buzzer
76 Courtesy light (toggle switch in light unit)
79 Trunk light

BULBS

2	Engine compartment light . .	5 W
24	Front direction indicators-emergency flasher and parking lights	5/21 W
25	Headlamp Hi/Low	Sealed beam
26	Fog lamp	Sealed beam
27	Side marker lights	3 W
31	Instrument lights	
32	Fuel reserve warning light	
33	Hand throttle warning light	
34	Direction indicators warning light	
35	Alternator warning light	
36	Low fuel pressure warning light	
37	Blower warning light (two brightness levels)	
38	High beam warning light	
39	Warning light for fluid level, service brake pressure and parking brake	
40	Low oil pressure warning light	
41	Parking light warning	
42	Glove compartment light . .	5 W
44	FASTEN SEAT BELTS light	
45	Heater control panel light	
53	Emergency flashers pushbutton warning light	
54	HAZARD light	
55	Heated rear window pushbutton warning light	
61	DEF light	
63	WIPE light	
77	Courtesy light	5 W
80	Trunk light	5 W
83	Rear direction indicators and emergency flashers	21 W
84	Rear parking and stop lights	5/21 W
85	Back-up lights	21 W
86	License plate lights	3 W

CABLE COLOR CODE

A	blue	**V**	green
B	white	**Z**	violet
C	orange	**AB**	blue/white
G	yellow	**AN**	blue/black
H	grey	**BN**	white/black
M	brown	**GN**	yellow/black
N	black	**HN**	grey/black
R	red	**RN**	red/black
S	pink	**VN**	green/black

The figure following the color code on the diagra shows the wire gauge in mm².
Where not shown the wire gauge is 1 mm².

PLATE ON FUSEBOX

1, 2, 3, 4 Main devices
5 Parking lights
6 Indicating devices
7 L.H. high beam
8 R.H. high beam
9 L.H. low beam
10 R.H. low beam

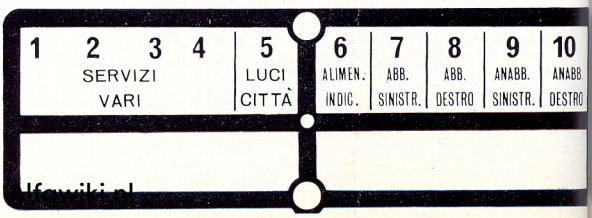

lfawiki.pl

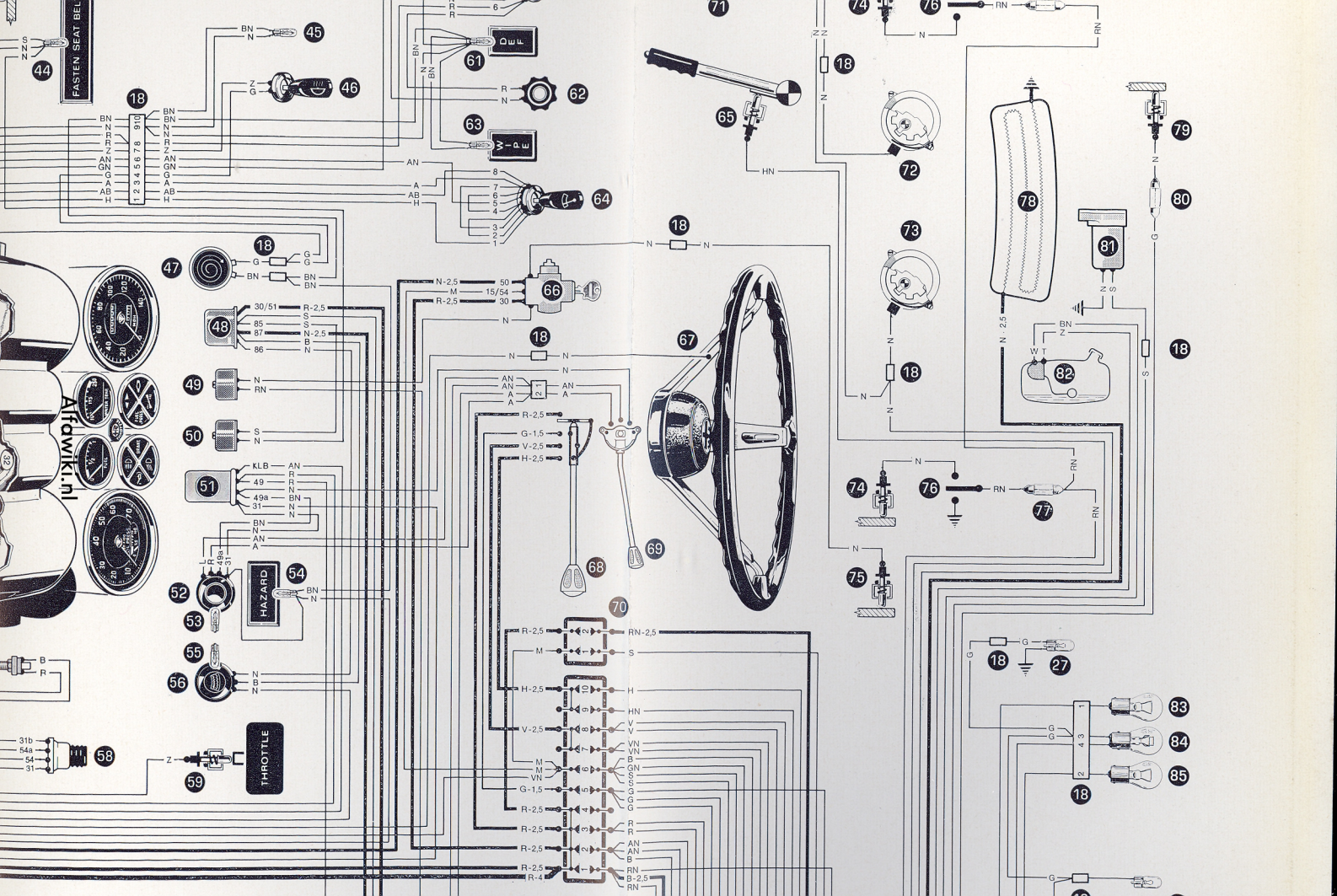
FASTEN SEAT BELT
HAZARD
THROTTLE
Alfawiki.nl

Wiring diagram

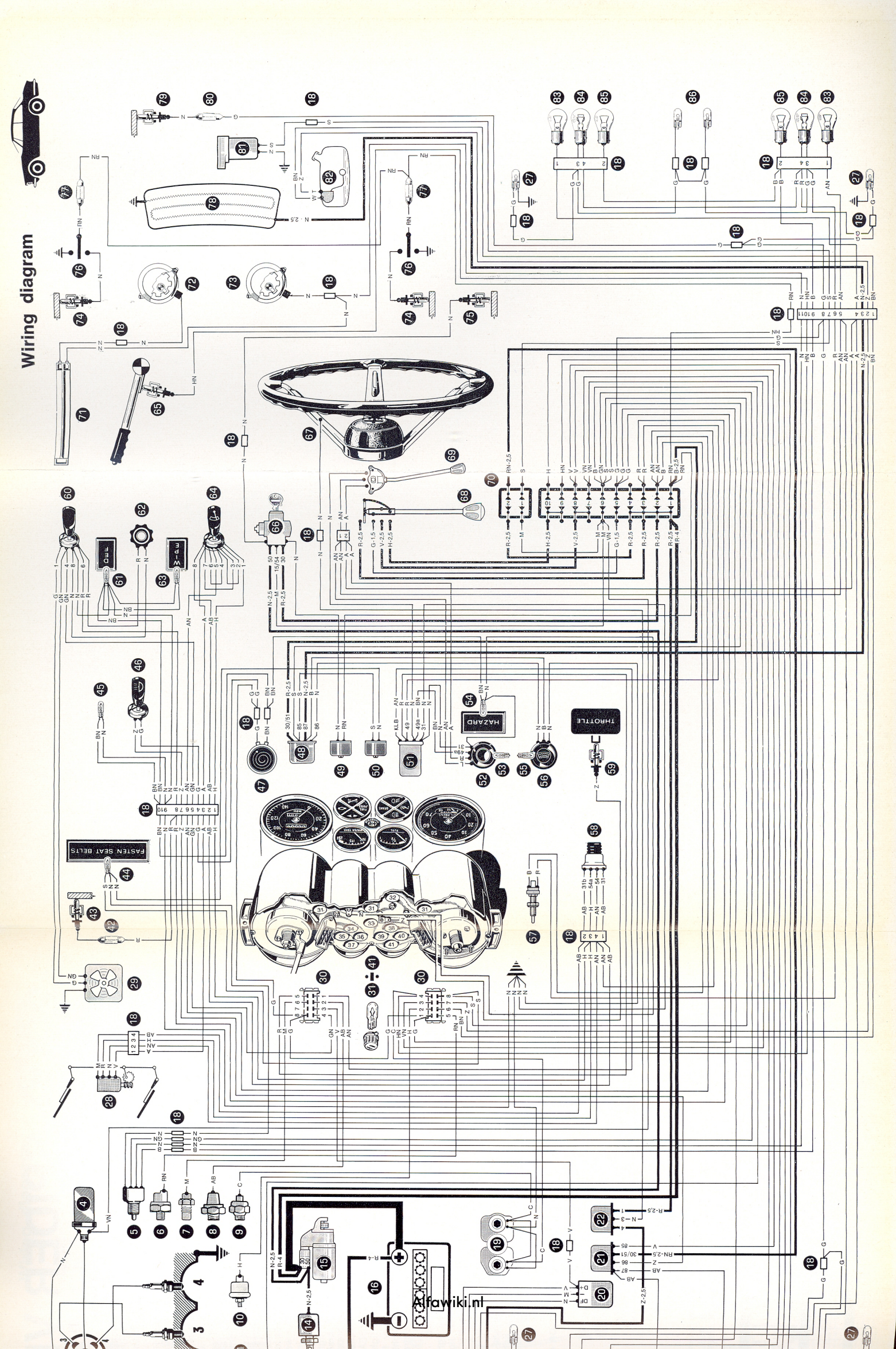

Wiring diagram

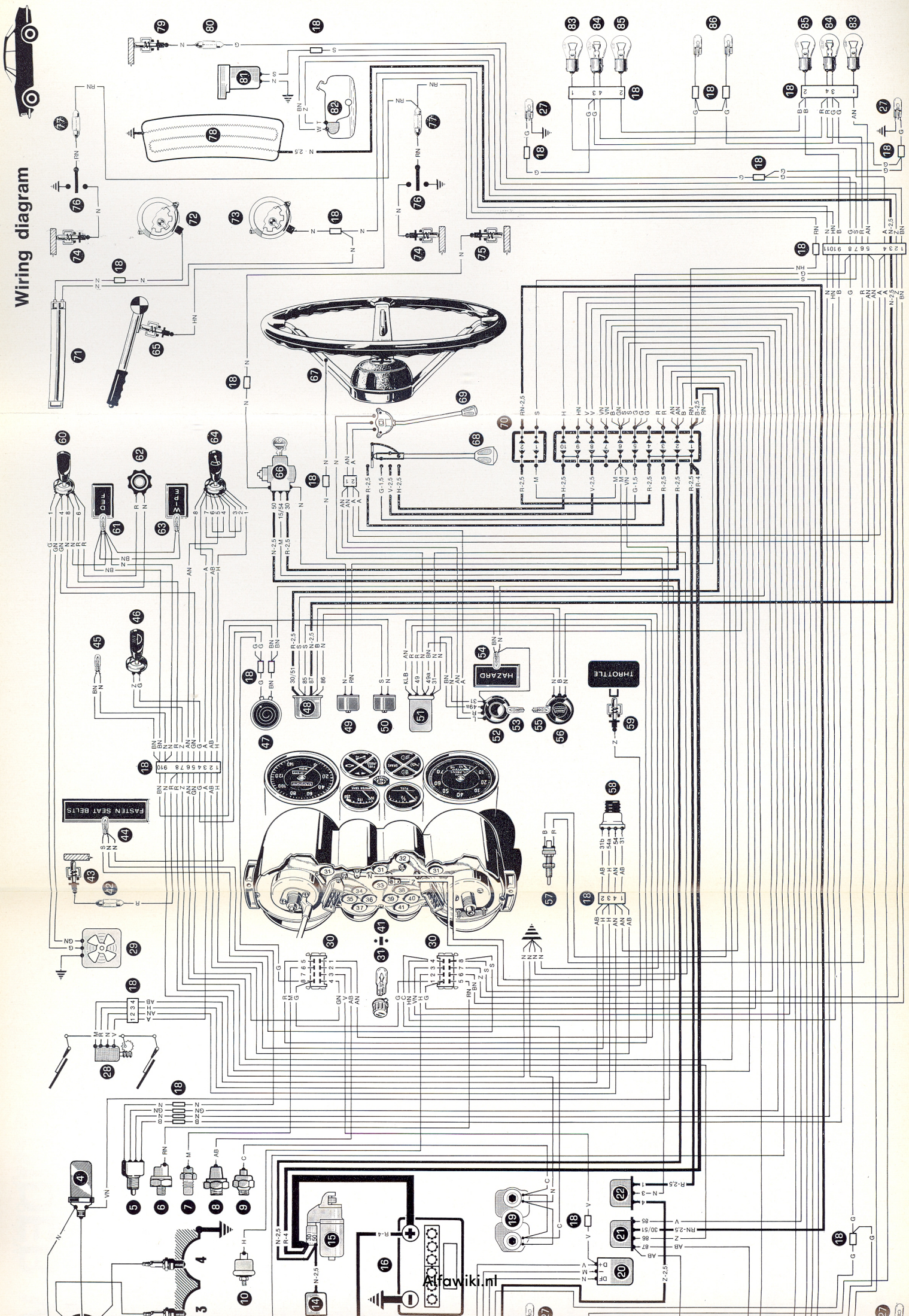

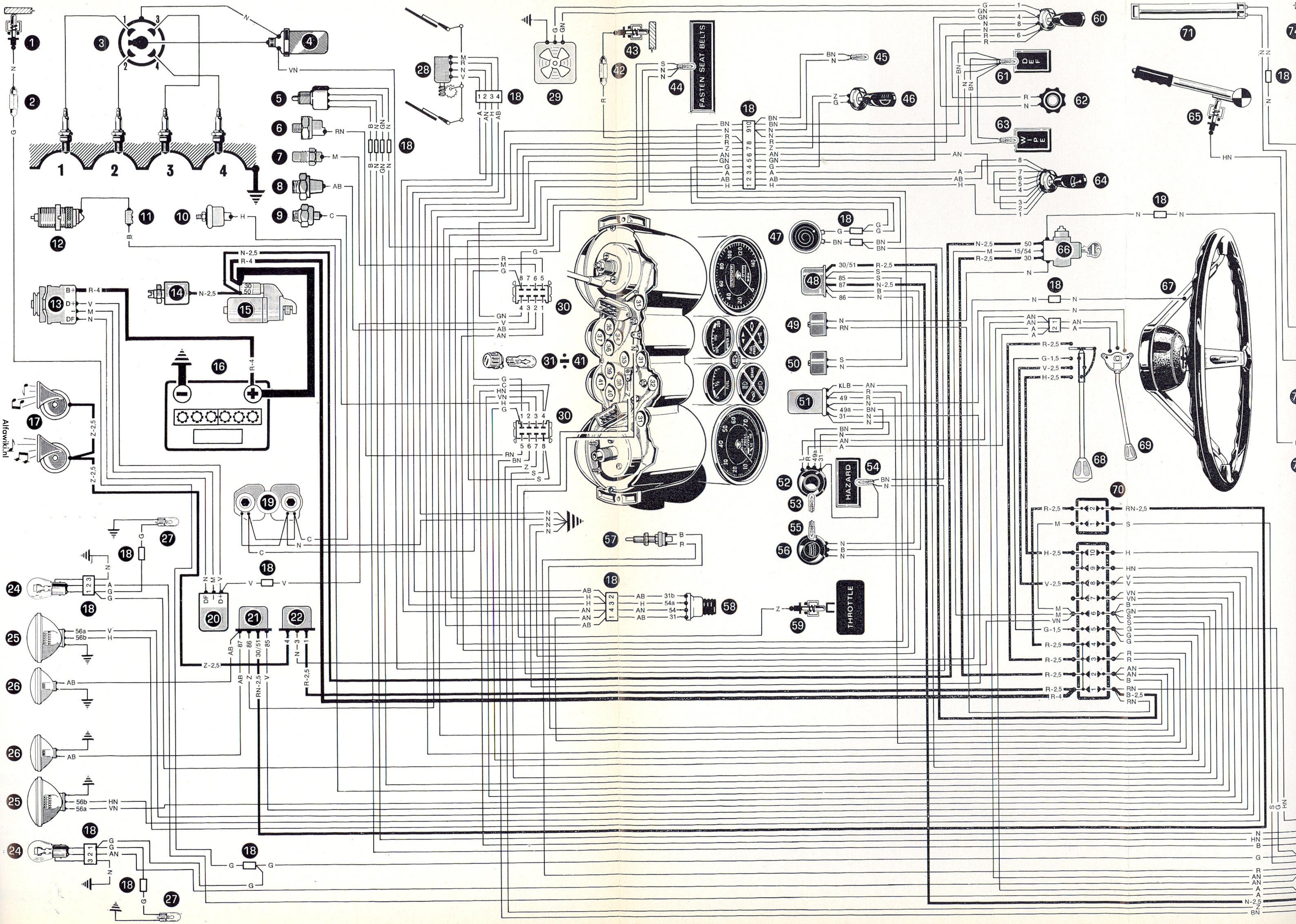
FASTEN SEAT BELTS
HAZARD
THROTTLE
1 2 3 4
1 2 3 4
1 2 3 4

2000 SPIDER VELOCE®

DEVICES

3 Ignition distributor . . (Marelli S.103 B)
4 Coil . . . . . (Marelli BZR 2000 D)
6 Oil pressure gage sender
7 Coolant thermometer sender
8 Low fuel pressure warning light switch
9 Service brake pressure warning light switch
10 Low oil pressure warning light switch
12 Fuel cut-off solenoid
13 Alternator { Bosch K 1 14 V 45 V 22 / Motorola S.E.V. MARCHAL A.14.45/ 55.712 70 702
14 Cold start device solenoid
15 Starter . . . . . (Bosch EF 12 V 0,7 PS)
16 Battery . . . . . 12 V 60 Ah
17 Horn
18 Junction boxes and connectors
19 Brake fluid level warning light switches
20 Voltage regulator { Bosch AD 1 14 V / Motorola S.E.V. MARCHAL 14 V
21 Horn relay
26 Windshield wiper (two speed)
29 Blower motor (two speed)
40 Key-reminder buzzer
41 Safety belt buzzer
43 Flasher unit
53 Dimmer for HAZARD, DEF, WIPE lights and heater control panel light
58 Cigarette lighter
64 Fuseboxes
74 Electric fuel pump
75 Fuel level sender

SWITCHES

1 Engine compartment light
5 Back up light and safety belt
11 Microswitch
28 Glove compartment light
39 Stop lights
42 Windshield washer, foot operated
48 Emergency flashers
51 Blower
55 Windshield wiper
57 Ash tray light
59 Hand throttle warning light
60 Parking brake warning light
62 Ignition and starting
63 Horn control
65 Parking lights, headlamps and flashing
66 Direction indicators
67 Key-reminder buzzer
68 Courtesy light
69 Switch for FASTEN SEAT BELTS light and buzzer (at passenger's side)
70 Belt retractor (passenger's side)
71 Belt retractor (driver's side)
73 Trunk light

BULBS

2	Engine compartment light . .	5 W
23	Front direction indicators-emergency flasher and parking lights	5/21 W
24	Headlamp Hi/Low	Sealed beam
25	Side marker lights	3 W
27	Glove compartment light . .	5 W
30	Low oil pressure warning light	
31	High beam warning light	
32	Low fuel pressure warning light	
33	Parking light warning	
34	Instrument lights	
35	Fuel reserve warning light	
36	Blower warning light (two brightness levels)	
37	Alternator warning light	
38	Direction indicators warning light	
44	Warning light for fluid level, service brake pressure and parking brake	
45	Hand throttle warning light	
46	FASTEN SEAT BELTS light	
47	HAZARD light	
49	Emergency flasher pushbutton warning light	
50	Heater control panel light	
52	DEF light	
54	WIPE light	
56	Ash tray light	5 W
61	Courtesy light	
72	Trunk light	
76	Rear direction indicators and emergency flashers	21 W
77	Parking and stop lights . . .	5/21 W
78	Back-up lights	21 W
79	License plate lights	3 W

CABLE COLOR CODE

A	blue	**V**	green
B	white	**Z**	violet
C	orange	**AB**	blue/white
G	yellow	**AN**	blue/black
H	grey	**BN**	white/black
M	brown	**GN**	yellow/black
N	black	**HN**	grey/black
R	red	**RN**	red/black
S	pink	**VN**	green/black

The figure following the color code on the diagra shows the wire gauge in mm^2.
Where not shown the wire gauge is 1 mm^2.

PLATE ON FUSEBOX

1, 2, 3, 4 Main devices
5 Parking lights
6 Indicating devices
7 L.H. high beam
8 R.H. high beam
9 L.H. low beam
10 R.H. low beam

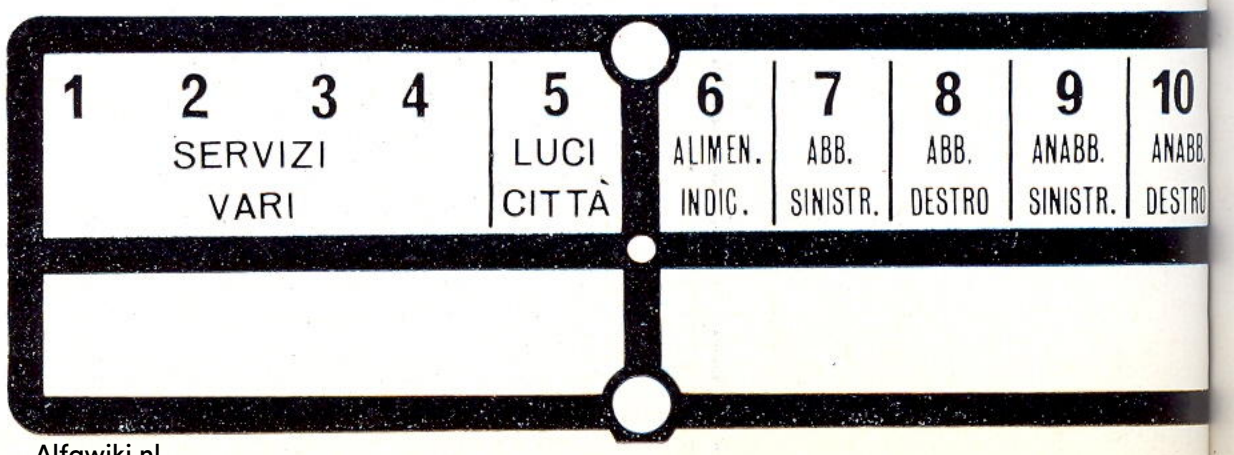

Alfawiki.nl

Wiring diagram

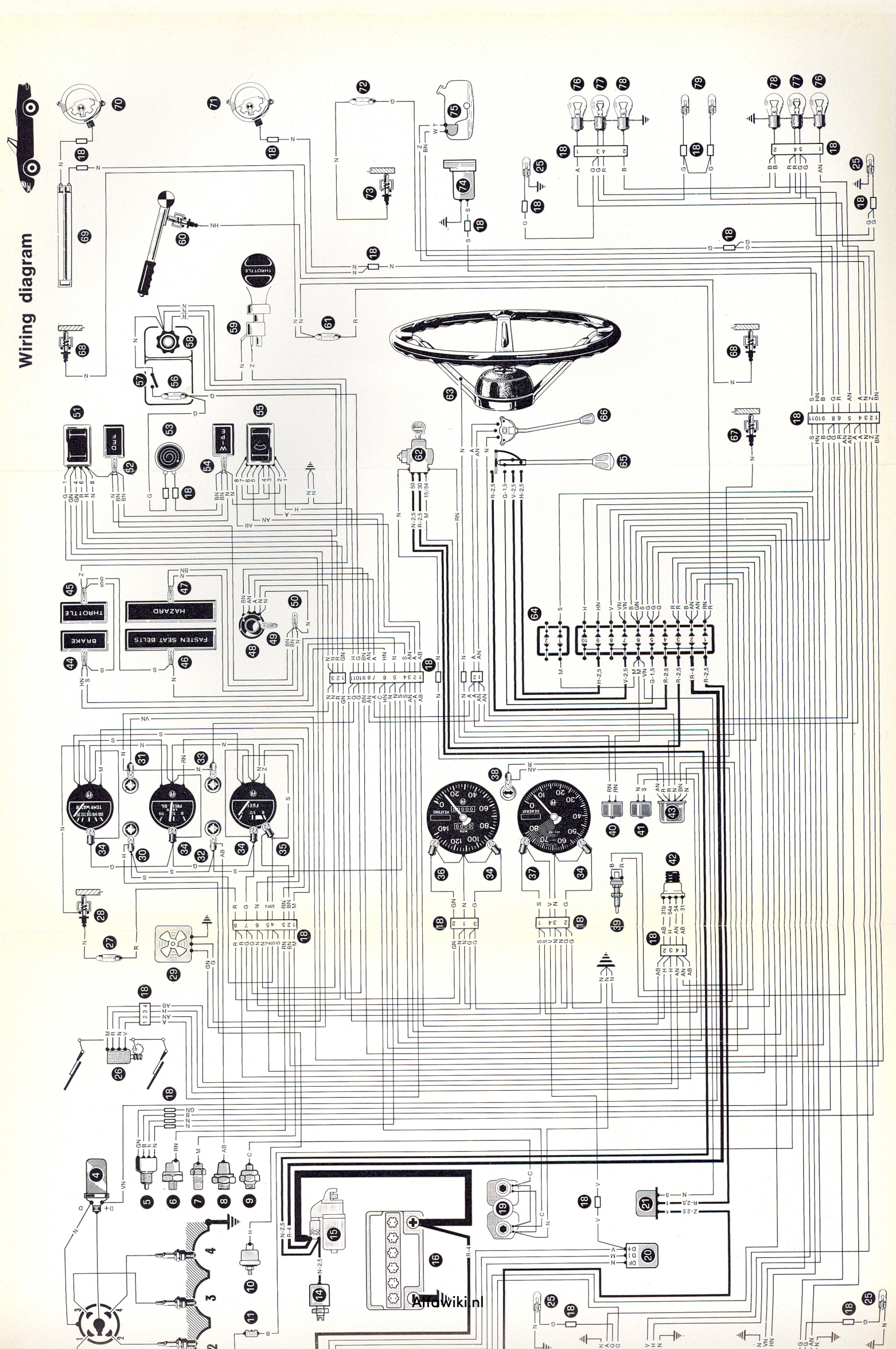

AnyWiki.nl

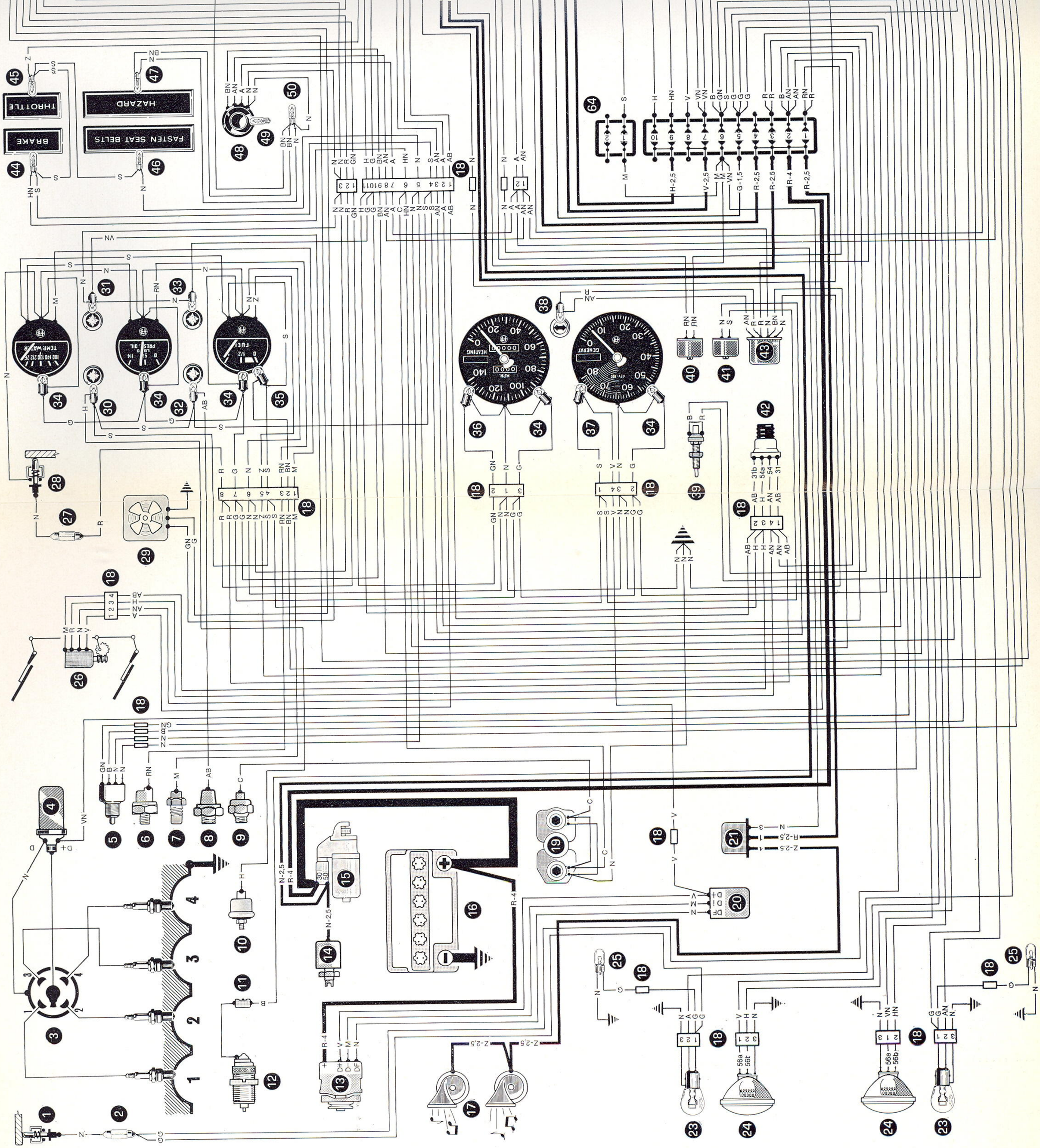
THROTTLE
BRAKE
HAZARD
FASTEN SEAT BELTS
TEMP WATER
PRES OIL
FUEL
HEATING
GENERAT
MPH
RPM x 100
Alfawiki.nl

Alfa Romeo

Via Gattamelata, 45 - 20149 MILANO

DIASS - Pubblic. N. 1845
3/72 - 2300

Printed in Italy
arti grafiche milanesi

Stampato su carta patinata Burgo
da gr. 200 e 96 al mq.

All rights reserved. This book, or parts thereof, may not be reproduced in any form without permission of Alfa Romeo S.p.A.

Alfawiki.nl

Alfawiki.nl