155

REPAIR MANUAL

VEHICLE CHARACTERISTICS AND MAINTENANCE

Alfa Romeo

Alfawiki.nl

ALFA ROMEO 155

VOLUME I
(CHARACTERISTICS)

[SMS PART No Z6016]

THIS MANUAL CONTAINS THE FOLLOWING UPDATES

DESCRIPTION	PRINT No
MAIN MANUAL	4655***00000
SUPPLEMENT	4655***00001
SUPPLEMENT	4655***00002
SUPPLEMENT	4655***00003
SUPPLEMENT	4655***00004
SUPPLEMENT	4655***00005
SUPPLEMENT	4655***00006

Alfawiki.nl

DIVISION OF
"REPAIR MANUAL"

Models 155

The documentation published by the Alfa Romeo Assistance Service for the "155" vehicle is composed of the following publications:

155 REPAIR MANUAL
• VEHICLE CHARACTERISTICS AND MAINTENANCE

155 T.SPARK V6	- PA4655A1000000:	GROUP 00
155 ⊠	- PA4655A24x4000:	GROUP 00
155 TD	- PA4655A3TD0000:	GROUP 00
155 TD 2.5	- PA4655A4TD2500:	GROUP 00
155 T. SPARK 16V	- PA4655A516V000:	GROUP 00

155 REPAIR MANUAL
• ENGINES

- PA4655B1000000: GROUPS 01, 04, 05, 07
  Engine 1995 cm^3 (code AR 67202)
  Engine 1773 cm^3 (code AR 67102)
  Engine 1749 cm^3 (code AR 67103)
- PA4655B2000000: GROUPS 01, 04, 05, 07
  Engine 2492 cm^3 (code AR 67301)

155 REPAIR MANUAL
• MECHANICAL UNITS
• BODY

- PA4655C1000000: MECHANICAL UNITS
- PA4655D1000000: Electrical components,
  Bodywork,
  Trim,
  Heating and Ventilation

155 REPAIR MANUAL
• ELECTRICAL & ELECTRONIC DIAGNOSIS

- PA4655E1000000: Wiring diagrams and Troubleshooting

Alfawiki.nl

155

REPAIR MANUAL

SUPPLEMENT FOR 155

- ENGINES
- MECHANICAL UNITS
- BODY
- ELECTRICAL & ELECTRONIC DIAGNOSIS

- PA4736B14x4000: GROUPS 01, 04, 05, 07
  Engine 1995 cm^3 TURBO (code AR 67200
- PA4736C14x4000: MECHANICAL UNITS
- PA4736D14x4000: Electrical components,
  Bodywork,
  Trim,
  Heating and Ventilation
- PA4736E14x4000: Wiring diagrams and Troubleshooting

155

REPAIR MANUAL

SUPPLEMENT FOR 155 TD

- ENGINES
- MECHANICAL UNITS
- BODY
- ELECTRICAL & ELECTRONIC DIAGNOSIS

- PA4805B1TD0000: GROUPS 01, 04, 05, 07
  Engine 1929 cm^3 TURBO DIESEL
  (code AR 67502)
- PA4805C1TD0000: MECHANICAL UNITS
- PA4805D1TD0000: Electrical components,
  Bodywork,
  Trim,
  Heating and Ventilation
- PA4805E1TD0000: Wiring diagrams and Troubleshooting

155

REPAIR MANUAL

SUPPLEMENT FOR 155 TD2.5

- ENGINES
- MECHANICAL UNITS
- BODY
- ELECTRICAL & ELECTRONIC DIAGNOSIS

- PA4830B1TD2500: GROUPS 01, 04, 05, 07
  Engine 2.498 cm^3 TURBO DIESEL
  (code VM07B)
- PA4830C1TD2500: MECHANICAL UNITS
- PA4830D1TD2500: Electrical components,
  Bodywork,
  Trim,
  Heating and Ventilation
- PA4830E1TD2500: Wiring diagrams and Troubleshooting

155

REPAIR MANUAL

SUPPLEMENT FOR 155 T.SPARK 16V

- ENGINES
- MECHANICAL UNITS
- BODY
- ELECTRICAL & ELECTRONIC DIAGNOSIS

- PA4978B116V000: GROUPS 01, 04, 05, 07
  Engine T.SPARK 16v
  (code AR 67204)
- PA4978C116V000: MECHANICAL UNITS
- PA4978D116V000: Electrical components,
  Bodywork,
  Trim,
  Heating and Ventilation
- PA4978E116V000: Wiring diagrams and Troubleshooting

Alfawiki.nl

UPDATE CARD

155

REPAIR MANUAL

- VEHICLE CHARACTERISTICS AND MAINTENANCE

[illegible]	[illegible]	PAGE	
[illegible]	[illegible]	SUBSTITUTED	ADDED
[illegible]	[illegible]	00-1 00-2 00-11 to 00-16 00-19 00-20 00-27	00-A1 00-A2 00-A3

01.B. Each of the specific sections for models [illegible], [illegible] TO and [illegible] TO 2.8 contained herein has its own autonomous update card.

Alfawiki.nl

INTRODUCTION

This publication provides the information necessary for the maintenance and repair operations regarding the 155 for the models listed in the "vehicle identification" table. The aim of this publication is to provide the Alfa Romeo Service staff with a tool which can be used to rapidly identify any faults and help to render the intervention precise and efficient.

The manual shows the procedures relative to the removal and refitting operations, disassembly and checks regarding the various groups which form the vehicle. The procedures are illustrated in detail as is the use of any necessary tools. A system of symbols combined with the basic technical data given to one side of each drawing facilitate a rapid and complete consultation of the manual.

Particular attention has been given to the fault diagnosis procedures which can be found at the end of each group. These combine with the irreplaceable experience of the operator and help to correctly identify and rectify the fault starting from the malfunction which the operator himself has detected and carrying out a series of tests on the system affected by the fault.

For the information relative to the vehicle's electrical system the "155 - Repair Manual - Electrical-Electronics Diagnosis" manual should be consulted.

All the information contained in this manual is accurate to the date of publication.

Alfa Romeo reserves the right to carry out any modifications to its products considered necessary without warning, though the technical information and up-dates regarding this manual will be promptly published.

How to use this manual

This manual is divided into chapters [illegible] to each of the assemblies which make up the vehicle.

To rapidly identify the group required, refer to the [illegible] index.

Each group is accompanied by an analytic index and illustrated index in order to facilitate the search for the required subject.

A brief description of the "removal-refitting", "disassembly/reassembly" and "checking and adjustment" procedures follows.

The procedures show the complete disassembly of the components and should be carried out alone only when strictly necessary. The reassembly and refitting procedures are normally a simple reversal of the "disassembly" and "removal" procedures and only the reassembly procedures which are significantly different are illustrated.

The technical data, specific tools and fault diagnosis procedures follow the procedures mentioned above.

Alfawiki.nl

Symbols

This manual employs a series of symbols in order for the mechanic the information provided to be easily located.

The list of the symbols follows:

- removal/disassembly
- refitting/reassembly
- Tighten to the torque
- Rivet nut
- adjustment/regulation
- visual check
- lubricate
- weight difference
- angular value
- pressure
- temperature
- Bleed air from brake system
- surface to be treated
- interference
- [illegible]
- [illegible]
- exhaust
- lubricate with engine oil
- left-hand thread
- tightening torque in oil
- engine idle speed
- ovalization
- taper
- eccentricity
- flatness
- diameter
- linear dimension
- parallelism
- top-up with grease
- heating temperature
- seal
- top-up with engine oil
- grease
- WARNING!
- CAUTION!

Alfawiki.nl

Indications for the operators

All the operations must be carried out with the greatest care in order to avoid damaging vehicles and persons.

- For some procedures the use of the Alfa Romeo specific tools is indicated. The use of these tools is indispensable to the safety of the operation and to avoid damage to the parts involved in the procedure.
- To detach adhering parts, lightly tap with an aluminium or lead mallet; for parts in metal and a wooden or resin mallet for parts in light alloy.
- When disassembling check that the necessary parts have been marked.
- If necessary when refitting, lubricate the parts to prevent seizing or binding during the initial stages of operation.
- Using adhesive tape or clean rags, protect the parts which, after disassembly may allow dust or foreign particles to enter the engine.
- When refitting it is vital that the tightening torques and regulation settings are respected.
- During removal substitute the seal rings, oil seals, flexible washers, safety plates, self locking nuts and any other part showing signs of wear.
- Avoid marking the fittings inside the vehicle.

Assemblies or detached parts must only be replaced by original spare parts as only in this way can the suitability of the part and its perfect operation be guaranteed.

- CAUTION and WARNING indicate those procedures which must be carried out with particular care in order to prevent personal injury or damage to the vehicles.

WARNING:
is used when lack of care may cause pers[illegible] injury.

CAUTION:
is used when lack of care may cause dam[illegible] to the vehicle or parts of it.

Obey the current safety regulations regarding [illegible] ation in the workshop. Where necessary [illegible] precautions have been given in the manual [illegible] to prevent dangerous situations from arising.

NOTE:
It is possible that some subjects have not been [illegible] in time for publication.
In the indexes to the individual groups these subjects indicated however and are accompanied by the [illegible] Due for publication.
The Technical Assistance will provide documents relative to these subjects in the form of up date [illegible] or in "Technical Bulletins" which will promptly be [illegible] the Alfa Romeo Assistance Network.

NOTE:
It should be pointed out that inside this manual the vehicle may also be indicated with the "[illegible]" vehicle.

Alfawiki.nl

WEIGHTS AND LOADS

Version		155 T.SPARK 1.7 (167A4H)		155 T.SPARK 1.8 (167A4G)		155 T.SPARK 1.8 (167A4E)		156 T.SPARK 2.0 (167A4D)		156 V6 (167A1C)	
		(*)	(**)	(*)	(**)	(*)	(**)	(*)	(**)	(*)	(**)
Kerb weight	kg	1205	1250	1205	1250	1205	1250	1215	1260	1290	1350
Towable weight	with trailer with brakes kg	1300	1300(+)	1300	1300	1300	1300	1400	1300	1400	1400
	with trailer without brakes kg	500	500	500	500	500	500	500	500	500	500
Maximum loading on tow hook	kg	50	50	90	50	90	50	95	50	95	50

(*) Until September 1993
(**) From September 1993
(+) for 167A4L (french market) = 1200 kg

Alfawiki.nl

WEIGHTS AND LOADS

Version			155 TD2.5 (167A1A)	
			Until September 1993	From September 1993
Kerb weight (excluding driver)		kg	1340	1400
Towable weight	with trailer with brakes	kg	1500	1500
	with trailer without brakes	kg	500	500
Maximum loading on tow hook		kg	105	50

Alfawiki.nl

WEIGHTS AND LOADS

Version			155 TD (167A3)	
			Until September 1993	From September 1993
Kerb weight (excluding driver)		kg	1250	1300
Towable weight	with trailer with brakes	kg	1300	1400
	with trailer without brakes	kg	500	500
Maximum loading on tow hook		kg	90	50

Alfawiki.nl

WEIGHTS AND LOADS

Version			155 (167A2C-167A2E)	
			Until September 1993	From September 1993
Kerb weight (excluding driver)		kg	1350	1465
Towable weight	with trailer with brakes	kg	1500	1500
	with trailer without brakes	kg	500	500
Maximum loading on tow hook		kg	105	50

Alfawiki.nl

GROUP 00

VEHICLE CHARACTERISTICS AND MAINTENANCE

INDEX

DIMENSIONS ..... 00 - 3
WEIGHTS AND LOADS ..... 00 - 4
WHEELS AND TYRES ..... 00 - 5
MODEL IDENTIFICATION ..... 00 - 6
- Identification labels ..... 00 - 6
- Identification ..... 00 - 7
- label ..... 00 - 8
- Paint identification label ..... 00 - 8
DIMENSIONS ('95 Versions) 00-8/1
WEIGHTS AND LOADS ('95 Versions) 00-8/2
TYRES AND WHEELS ('95 Versions) 00-8/2
MODEL IDENTIFICATION ('95 Versions) 00-8/3
- Model identification 00-8/3
- Identification label 00-8/3
SPECIFIC TOOLS ..... 00 - 9
LIFTING AND TOWING POINTS ..... 00 - 9
SERVICING OPERATIONS 00-11
- Schedule checks and maintenance 00-14
  - Specific for T. SPARK models 00-14
  - Specific for V6 model 00-15
FLUIDS AND LUBRICANTS 00-16
APPROXIMATE SERVICING CAPACITIES 00-19
SPECIFIED FUEL 00-19
ENGINE SERVICING OPERATIONS Specific for T. SPARK engines 00-20
- Changing the engine oil and filter 00-20
- Tightening cylinder head nuts 00-21
- Checking and adjusting valve clearance 00-22
- Checking timing chain tension 00-26
- Auxiliary organ belts 00-27
  - Water pump - power steering pump drive belt 00-27
  - Air conditioning compressor - alternator drive belt 00-29
- Checking pressure and sealing of the fuel circuit 00-32
- Checking sealing of fuel vapour recovery system (due for publication) 00-33
- Replacing air cleaner cartridge 00-34
- Checking sealing of the air circuit 00-34
- Replacing the fuel filter 00-35
- Checking exhaust emissions 00-36
- Checking the Lambda probe 00-36
- Checking and replacing the spark plugs 00-37
  - Maintenance 00-37
- Testing the seal on engine cooling system pressurized cap 00-38

Alfawiki.nl

- Checking sealing of the engine cooling system 00-38
- Replacing engine coolant fluid..... 00-39

ENGINE MAINTENANCE OPERATIONS

For the V6 engine..... 00-40
- Replacing engine oil and filter 00-40
- Tightening cylinder head nuts 00-41
- Checking and adjusting valve clearance 00-42
- Replacing the timing belt 00-47
- Auxiliary unit belts 00-55
  - Water pump - alternator drive belt 00-55
  - Air conditioning compressor drive belt 00-57
  - Power steering pump drive belt 00-59
- Checking pressure and sealing of fuel circuit..... 00-61
- Checking sealing of fuel vapour recovery system (due for publication)..... 00-62
- Replacing air cleaner cartridge 00-62
- Checking sealing of the air circuit .. 00-63
- Replacing the fuel filter 00-63
- Checking exhaust emissions 00-64
- Checking the Lambda probe 00-65
- Checking and replacing the spark plugs..... 00-65
  - Maintenance 00-65
- Testing the seal on the engine cooling system pressurized cap.... 00-66
- Checking sealing of the engine cooling system..... 00-67
- Replacing engine coolant fluid..... 00-67

MAINTENANCE OF MECHANICAL UNITS 00-69
- Checking for damage of the halfshaft, power steering bellows and steering knuckles 00-69
  - Drive shafts..... 00-69
  - Steering rods 00-69
- Braking circuit sealing test 00-70
- Checking level of the clutch/brake fluid..... 00-71
- Checking handbrake travel..... 00-71
- Checking power steering fluid..... 00-72
- Checking and replacing gearbox -differential oil For T. SPARK engines 00-72
- Checking and replacing gearbox-differential oil For V6 engine 00-73
- Lubricating the door, bonnet and boot hinges; greasing the bonnet catches 00-74
  - Doors 00-74
  - Bonnet 00-74
  - Boot 00-74

TECHNICAL CHARACTERISTICS AND SPECIFICATIONS 00-75
- Belt tension..... 00-75
- Valve clearance..... 00-75
- Fuel delivery pressure 00-76
- Idle speed and exhaust emissions check 00-76
- Spark plugs..... 00-76
- Cooling system 00-76
- Parking brake 00-77
- Filling fluids and lubricants 00-77
- Tightening torques 00-78

SPECIFIC TOOLS..... 00-81

Alfawiki.nl

DIMENSIONS

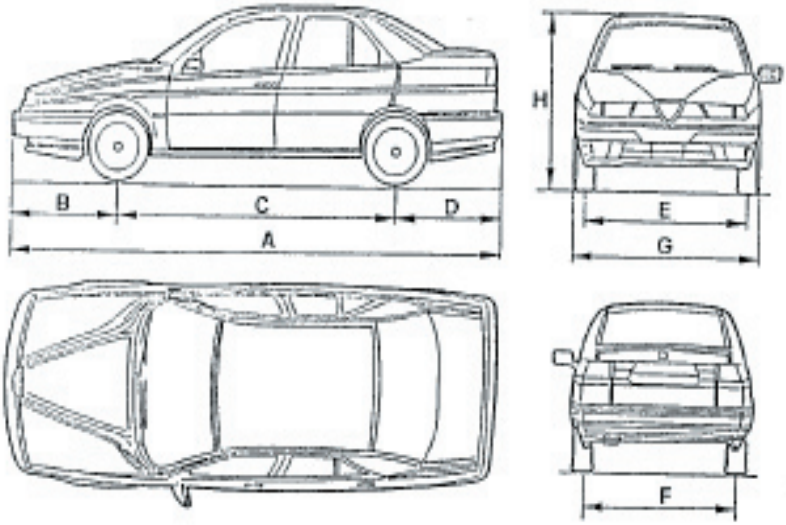

Dimensions			Models: 167 A4B 1749 c.c. (1)	155 T. SPARK 1.8	155 T. SPARK 2.0	155 V6
A	Overall lenght	mm	4443	4443	4443	4443
B	Front overhang	mm	960	960	960	960
C	Wheelbase	mm	2540	2540	2540	2540
D	Rear overhang	mm	943	943	943	943
E	Front track	mm	1469	1469	1469	1477
F	Rear track	mm	1402	1402	1402	1402
G	Overall width	mm	1700	1700	1700	1700
H	Overall height	mm	1440	1440	1440	1440

(1) Commercial name not available at time of going to press.

Alfawiki.nl

WEIGHTS AND LOADS

Weights and loads \ Models			167 A4B 1749 c.c. (1)	155 T. SPARK 1.8	155 T. SPARK 2.0	155 V6
Kerb weight without driver		kg	1270	1270	1290	1370
Weight when fully loads		kg	1770	1770	1790	1850
Useful load		kg	500	500	500	480
Max. permissible weight per axle	front	kg	950	950	965	985
	rear	kg	950	950	965	965
Towable weight	with braked trailer	kg	1300	1300	1400	1400
	trailer without brakes	kg	450	450	450	450
Loading on tow hook		kg	90	90	95	95

(1): Commercial name not available at time of going to press.

Alfawiki.nl

WHEELS AND TYRES

Characteristics \ Models		167 A4B 1749 c.c. (1)	155 T. SPARK 1.8	155 T. SPARK 2.0	155 V6
Rim dimensions		6J x 14"	6J x 14"	6J x 14" 6J x 15" (2)	6J x 15"
Tyre dimensions	standard	185/60 R14" 82H	185/60 R14" 82H	195/60 R14" 85V	195/55 R15" 84V
	optional	195/60 R14" 85V	195/60 R14" 85V	195/55 R15" 84V (2)	205/50 R15" 86V
Tyre pressures bars (kg/cm²)	medium load, normal speed	front 2.2 rear 2.0	front 2.2 rear 2.0	front 2.2 rear 2.0	front 2.5 rear 2.3
	fully loaded, high speed	front 2.5 rear 2.5	front 2.5 rear 2.5	front 2.5 rear 2.5	front 2.8 rear 2.5
Compact spare wheel	rim dimension	4J x 15"	4J x 15"	4J x 15"	4J x 15"
	tyre dimension	115/70 R15"	115/70 R15"	115/70 R15"	115/70 R15"
	tyre pressure bars (kg/cm²)	4.2	4.2	4.2	4.2

(1) Commercial name not available at time of going to press

(2) Optional for Germany

Alfawiki.nl

MODEL IDENTIFICATION

IDENTIFICATION LABELS

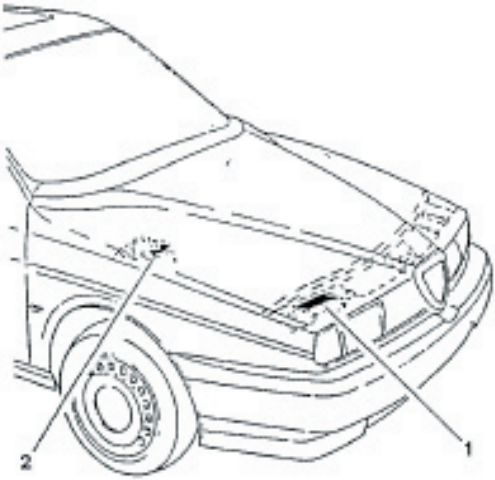

V6

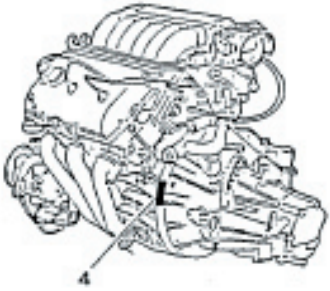

T. SPARK

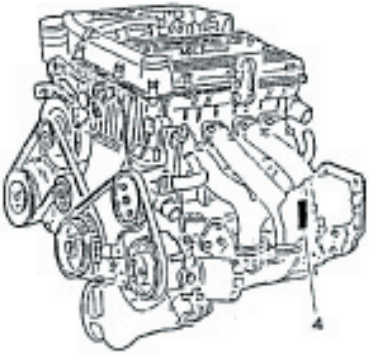

1. Identification data
2. Body label
3. Paint identification label
4. Engine label

Alfawiki.nl

MODEL IDENTIFICATION

Models		167 A4B 1749 c.c. (1)	155 T. SPARK 1.8	155 T. SPARK 2.0	155 V6
Type		4 door saloon			
Drive		LH + RH	LH + RH	LH + RH	LH + RH
Vehicle type No.	on identification label	167A4B	167A4C	167A2A	167A1
	in engine compartment to one side of the upper attachment of the right-hand shock absorber	167000	167000	167000	167000
Chassis serial number		0.000.000.1	0.000.000.1	0.000.000.1	0.000.0001
Engine type and serial No.		AR 67103 from 000.001	AR 67102 from 000.001	AR 67202 from 000.001	AR 67301 from 000.001

(1) Commercial name not available at time of going to press.

Alfawiki.nl

IDENTIFICATION LABEL

This is located on the engine compartment crossmember.
It carries the identification data listed on the right:

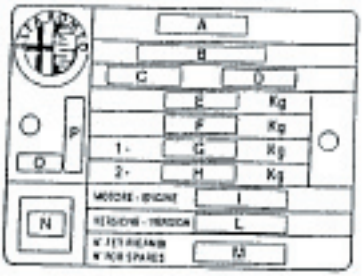

A. Manufacturer
B. Homologation number
C. Vehicle identification code
D. Chassis serial number
E. Maximum gross vehicle weight
F. Maximum gross vehicle weight including trailer.
G. Maximum gross weight on front axle.
H. Maximum gross weight on rear axle.
I. Engine code
L. Chassis code
M. Number for spare parts
N. Smoke opacity index (for Diesel and Turbo Diesel engines)
O. Supplier's code
P. Foreign manufacturer

PAINT IDENTIFICATION LABEL

This is located on the inner part of the luggage compartment and carries the data given on the right:

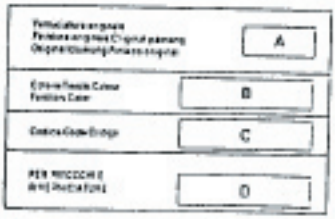

A. Paint manufacturer
B. Colour name
C. Colour code
D. Respray and touch-up code

Alfawiki.nl

DIMENSIONS ('95 Versions)

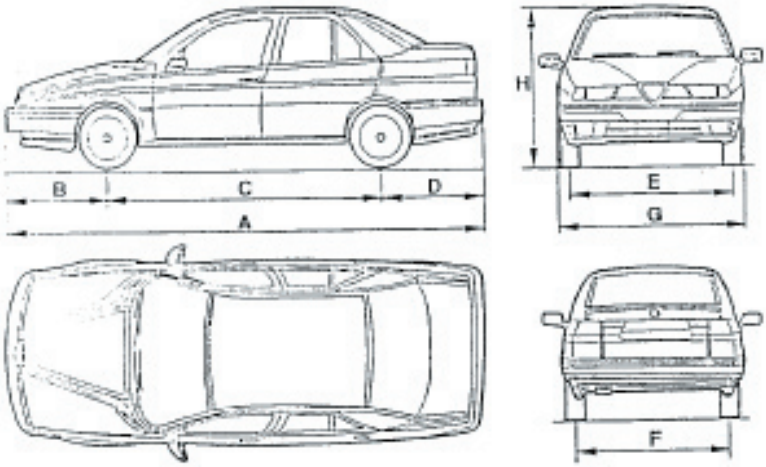

Dimensions			Models	155 1.7 T. SPARK 167A4H - 167A4G - 167A4L	155 1.8 T. SPARK 167A4E - 167A4M		155 V6 167A1E
A	Maximum length	mm		4443			
B	Front overhang	mm		960			
C	Wheelbase	mm		2540			
D	Rear overhang	mm		943			
E	Front track	mm		1496	1496 (1)		(*)
F	Rear track	mm		1438	1438 (1)		(*)
G	Maximum width	mm		1730			
H	Maximum height	mm		1440	(*)	(*)	(*)

(*) Not available at time of going to press.
(1) Versions with 14" rim.

Alfawiki.nl

WEIGHTS AND LOADS ('95 Versions)

Models / Weights and loads		155 1.7 T. SPARK 167A4H - 167A4G - 167A4L	155 1.8 T. SPARK 167A4E - 167A4M	155 V6 167A1E
Kerb weight (without driver)	kg	1290		1370
Towable weight (with braked trailer)	kg	1300		1400

TYRES AND WHEELS ('95 Versions)

Specifications / Models		155 1.7 T. SPARK 167A4H - 167A4G - 167A4L	155 1.8 T. SPARK 167A4E 167A4M		155 V6 167A1E
Rim size	standard	6J x 14"	6J x 14"	6.5 x 15"	6.5J x 15"
	optional	–	–	7J x 16"	7J x 16"
Tyre size	standard	185/60 HR14	185/60 HR14	205/50 VR15	205/50 VR15
	optional (for versions/markets where applicable)	–	195/60 VR14	205/45 ZR16	205/45 ZR16
Tyre pressure bar (kg/cm²)	reduced load (2 persons)	front 2.2 rear 2.0	front 2.2 rear 2.0	front 2.5 rear 2.3	front 2.5 rear 2.3
	full load	front 2.5 rear 2.5	front 2.5 rear 2.5	front 2.8 rear 2.5	front 2.8 rear 2.5
Compact spare wheel	rim size	4J x 15" (1)	4J x 15" (1) 4B x 15" (2)	4B x 15" (1)	4B x 15" (2)
	tyre size	115/70 R15 90M			
	tyre pressure bar (kg/cm²)	4.2			

(1): In steel (2): In alloy

WARNING:
In the event of continuous driving at top speed, the pressures should be increased by 0.3 bar.

NOTE: To improve mating between the wheels and the car body the rims have a specific camber for each rim size. Therefore in addition to the correct rim and tyre match it is also necessary to check and maintain the correct rim camber.

RIM SIZE	RIM CAMBER ANGLE
6J x 14"	31.5 mm
6.5J x 15"	37 mm
7J x 16"	41 mm

Alfawiki.nl

MODEL IDENTIFICATION ('95 Versions)

MODEL IDENTIFICATION

Models		155 1.7 T. SPARK			155 1.8 T. SPARK		155 V6
Trim level		4-door saloon					
Drive		LH + RH			LH + RH		LH + RH
Car model no.	on identification label	167A4H	167A4G □	167A4L □	167A4E	167A4M □	167A1E
	in the engine compartment, at the side of right-hand shock absorber upper connection	167000			167000		167000
Chassis serial no.		(*)	(*)	(*)	(*)	(*)	(*)
Engine type and serial no.		AR 67105 from (*)	AR 67103 from (*)	AR 67105 from (*)	AR 67102 from (*)	AR 67102 from (*)	AR 67303 from (*)

(*) Engine/chassis no. not available at time of going to press.
(□): Only for certain markets.

IDENTIFICATION LABEL

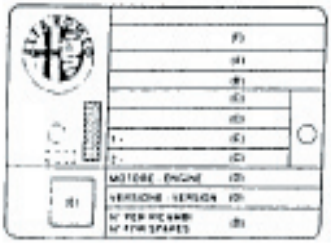

A. National homologation
B. Chassis serial number
C. Maximum weights authorized by the different national regulations
D. Model (for example 167A4H) and any supplementary information.
E. Smoke opacity index
F. Name of manufacturer

Alfawiki.nl

SPECIFIC TOOLS

The specific tools play a very important role in the maintenance of the vehicle as they are able to guarantee an accurate, reliable and rapid service.
It must be noted that the length of the various operations has been calculated considering the use of the specific tools.
This manual lists and illustrates the special tools designed by the vehicle manufacturer to carry out overhaul and maintenance activities on the vehicle.
The tool number is formed by a new number of 10 digits and an old number of 1 letter and 5 digits.

e.g.: 1.821.124.000
(A.3.0521)

The assistance network can supply particular specific tools through each Alfa Romeo dealer following procedures which already exist.

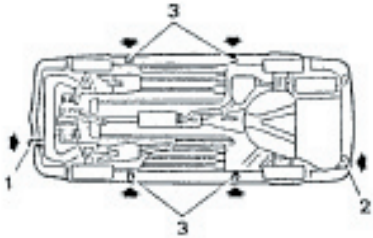

LIFTING AND TOWING POINTS

- If it is necessary to raise the vehicle, place jacks at the points indicated in the illustration.

CAUTION
After the vehicle has been raised on the jacks, it must be supported by suitable safety stands.
Before lifting the rear (front) end of the vehicle lock the wheels by placing chocks in front of (behind) the front (rear) wheels.

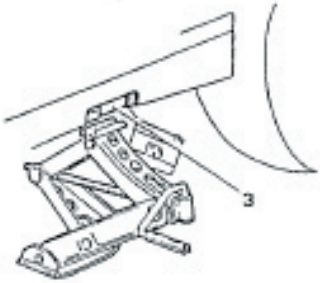

1. *Front tow hook*
2. *Rear tow hook*
3. *Jack socket*

Alfawiki.nl

The vehicle is equipped with two tow hooks (front and rear) located on the right-hand side of the bumpers.
When towing the vehicle, drive with care and obey all the current laws.
Before towing, the ignition key of the vehicle to be towed should be turned to the MAR position and then turned to the STOP position without removing the key. In this way the steering wheel will not lock.
When being towed no vacuum will be created in the servo brake system and it will be necessary to exert more pressure on the pedal during braking.

The power steering system will also be inoperative and it will therefore be necessary exert a greater pressure on the steering wheel.

CAUTION
Never remove the key from the ignition as this will cause the steering wheel to lock.

– Front tow hook

– Rear tow hook

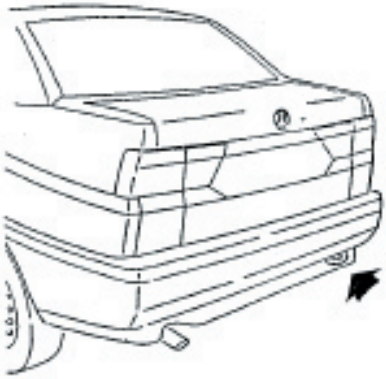

Alfawiki.nl

SERVICING OPERATIONS

The servicing operations comprise checking and restoring the efficiency of certain parts of the vehicle on which wear and phase displacement are foreseen after normal use.
The following table lists the servicing operations to be carried out at the specified mileage intervals.

WARNINGS:
Precautions to be taken before servicing operations.
The engine compartment contains many moving parts, high temperature components and high voltage cables that can be dangerous.
Carefully follow the precautions given below:
- Turn the engine off and allow it to cool down.
- Do not smoke or use naked flames. The presence of fuel can cause a fire hazard.
- Always keep a fire extinguisher handy.

Operations to have done at the mileage shown	km x 1,000									
	20	40	60	80	100	120	140	160	180	200
Changing the engine oil and filter (at all events once a year) and checking lubrication circuit for leaks	●	●	●	●	●	●	●	●	●	●
Checking the valve clearance (except engines with hydraulic tappets)		●		●		●		●		●
Changing the timing gear drive belt						●				
Checking the conditions of trapezoidal belts		●		●		●		●		●
Checking the conditions of Poly V belts				●				●		
Changing the air cleaner cartridge		●		●		●		●		●
Changing the fuel filter cartridge (petrol versions)				●				●		
Checking the operation of exhaust gas oxygen sensor (lambda probe)				●				●		
Changing the spark plugs		●		●		●		●		●
Changing the antifreeze mixture				●				●		
Checking the gearbox and differential oil level (only versions with manual gearbox)				●				●		
Changing the differential and gearbox oil (only versions with automatic gearbox)		●		●		●		●		●
Checking the conditions of protective bellows for axle shafts, power steering and steering knuckle caps		●		●		●		●		●
Checking the brake and fuel pipes for leaks		●		●		●		●		●
Checking the handbrake travel		●		●		●		●		●
Checking the power steering oil level		●		●		●		●		●

Alfawiki.nl

Alfawiki.nl

SERVICING OPERATIONS (Continued)

To keep the car in good operating conditions, the following recommendations should be adhered to carefully:

Every 500 kms (or when refuelling) check:
- the engine oil level.
- the level of the fluid in the coolant circuit.
- the level of the brake/clutch fluid.
- the tyre pressures.
- the level of the fluid in the windscreen washer system.

Engine oil and filter
To be changed at the specified intervals.
At all events, they must be changed once a year.

Air cleaner
If the car is habitually used on dusty roads, the air cleaner should be changed more often than specified.

Brake pads
Wear of the brake pads is indicated by the turning on of a warning light on the instrument cluster.
When changing the front pads, also check the rear ones. However, depending on the use of the car, the rear pads might not need to be changed immediately, in which case, you are recommended to check them at a later stage.

Brake and clutch fluid
The brake fluid is hygroscopic, i.e. it absorbs moisture. To avoid faulty braking, change the brake fluid every two years, regardless of the mileage driven.

Battery
During hot weather, check the electrolyte level frequently.

Dust and/or pollen filter (if fitted)
Once a year, preferably at the beginning of summer, have the conditions of the dust and/or pollen filter (if fitted) checked by the Alfa Romeo Service Network.
If the car is mostly used for town/motorway driving or on dusty roads, it is wise to check more often than indicated.
Warning: Failure to change the filter can considerably reduce the performance of the air conditioner system.

Anti-freeze
It is advisable to top up with **Alfa Romeo Climafluid Super Permanent -40°C** to conserve the protective properties of the mixture.

Notes
Under special driving conditions (e.g. on roads sprinkled with antifreeze salt and/or corrosive substances, rough road surfaces, etc.) often check the boots of the axle shafts and steering box, and clean and lubricate joints, hinges, door catches, bonnet catch, etc.)
When forced to use fuel, lubricants and/or fluids in general with characteristics other than those specified by the manufacturer (in emergencies), replace the fluids and corresponding filters at the earliest opportunity.

Alfawiki.nl

SCHEDULED CHECKS AND MAINTENANCE

Specific for T. SPARK models

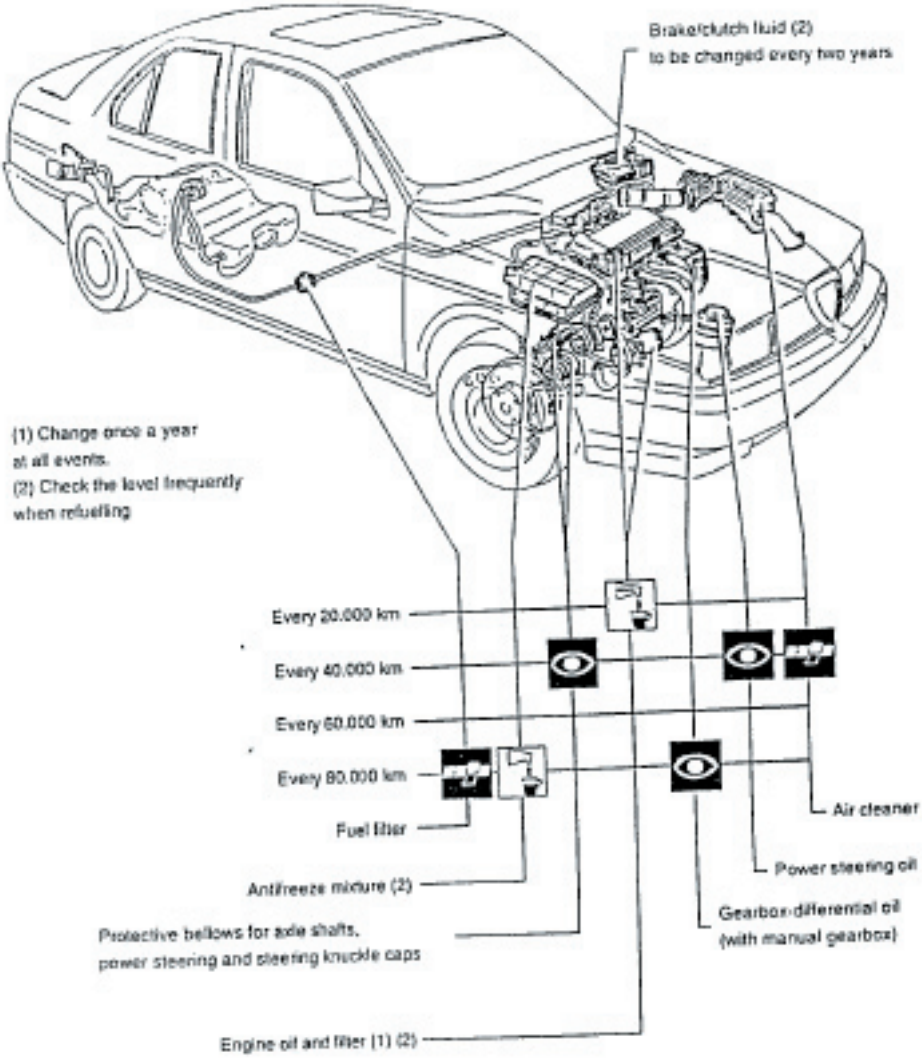

Alfawiki.nl

SCHEDULED CHECKS AND MAINTENANCE (Continued)

Specific for V6 model

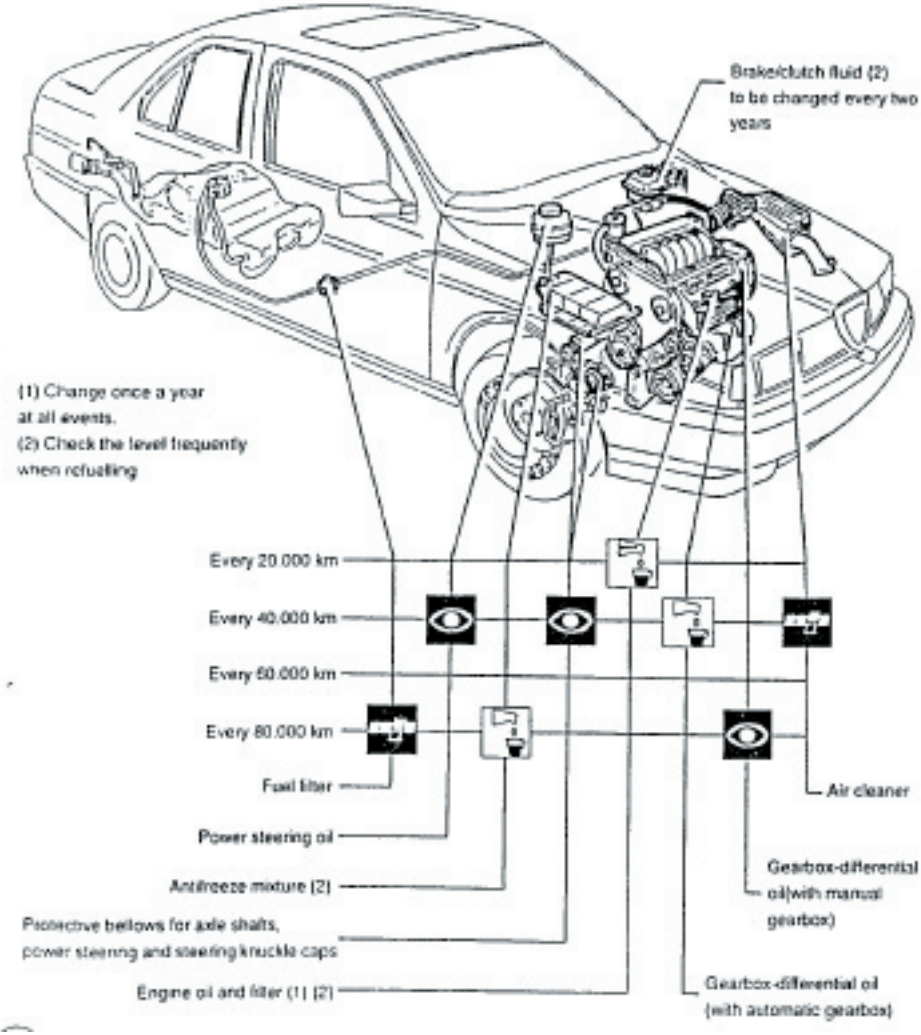

Alfawiki.nl

(*): This page replaces pages 00-16/17/18 of publication PA4655A1000000 of 7 - 1991. Therefore pages 00-17/18 are annulled.

FLUIDS AND LUBRICANTS

Type	Group ref.	Application	Classification	Name
OIL	01 - Engine (1)	Engine (Refilling)	API SG CCMC G5 SAE 10W/40	SELENIA SPECIAL FORMULA ALFA ROMEO 10W/40
	13 - Gearbox and differential	Gearbox and differential (Refilling)	API GL-4	TUTELA ZC 80/S
	80 - Climate control	Compressor (Refilling)	–	SUNISO 5GS
				SANDEN SP 10 "PAG" (▲)
FLUID	07 - Engine cooling	Cooling circuit (Refilling)	–	ALFA ROMEO CLIMAFLUID SUPER PERMANENT -40°C
	12 - Clutch	Brake and clutch hydraulic circuit (Refilling)	DOT 4 SAE J 1703 F	ALFA ROMEO BRAKE FLUID SUPER DOT 4
	22 - Brakes			
	23 - Steering	Power steering system (Refilling)	G.M. DEXRON II	TUTELA GI/A
	80 - Climate control	Air conditioner circuit (Refilling)	–	RIVOIRA Freon 12
				- RIVOIRA: SUVA R134a (▲) - HOECHST - TAZZETTI: FRIGEN R134a (▲) - ICI - TAZZETTI: KLEA R134a (▲)
GREASE	SEE SPECIFIC FUNCTIONAL GROUPS			

(1): For decidedly sportive use of the car fully synthetic SELENIA Racing 10W/60 engine oil is recommended.
(▲): From chassis nr [illegible]779 - 1003349 (on two assembly lines).

Alfawiki.nl

APPROXIMATE SERVICING CAPACITIES

Capacity \ Models		T. SPARK	V6
Fuel tank		63 litres	63 litres
Fuel reserve		~ 5 litres	~ 5 litres
Engine oil	Total capacity: sump + filter + wells + radiator	4.9 kg	6.6 kg
	Sump + filter (for periodical replacement)	4.5 kg	6.15 kg
	Oil filter	0.5 kg	0.5 kg
	Camshaft wells	0.41 kg	0.45 kg
Gearbox - differential oil		2 litres	2 litres
Brake - clutch circuit fluid		0.6 litres	0.6 litres
Power steering oil		1.0 litres	1.0 litres
Antifreeze mixture		8.3 litres	9.2 litres
Air conditioner compressor oil		135 g 240 ± 15 cm^3 (▲)	135 g 240 ± 15 cm^3 (▲)
Air conditioner system fluid		950 g 700 g (▲)	950 g 700 g (▲)

(▲): From chassis no. 105779 - 1003349 (on two assembly lines).

SPECIFIED FUEL

The octane number of a fuel defines its resistance to detonation: it is essential to use fuel with the correct number of octanes as this will prevent pinging which may prove dangerous for the engine.
The higher the octane number the greater the anti-detonation capacity.

The 155 model has been designed to run on unleaded petrol with an octane number of 95 RON (Research Octane Number).
These vehicles are all fitted with a catalytic converter.
To enable this to function with the highest degree of efficiency, unleaded petrol must be used, as the lead deposits contained in other fuels build up on the surface of the catalytic converter and prevent it from working properly.
The size of the filler necks has been reduced in order to prevent the nozzles used on leaded petrol pumps from being inserted.

Alfawiki.nl

ENGINE SERVICING OPERATIONS

Specific for T. SPARK engines
(AR 67103 - AR 67102 - AR 67202)

CHANGING THE ENGINE OIL AND FILTER

WARNING
Engine oil is harmful to the skin: avoid contact of the oil with the skin as far as possible; in the event of contact wash with soap and water.

– Set the car on a lift.
1. With the engine warm remove the filler cap.
2. Withdraw the oil level dipstick.

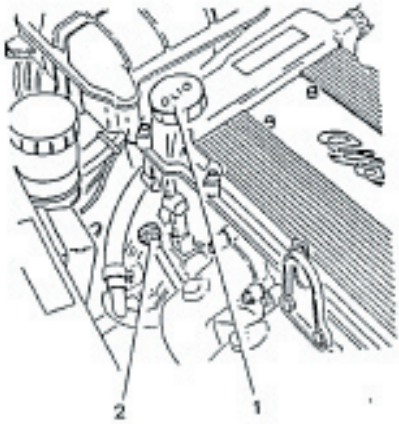

– Raise the car.
1. Slacken the drain plug and leave the oil to drain off completely for at least 15 minutes.
2. Using the special tool release the oil filter and remove it.

WARNING
Do not discard the oil in the environment, as indiscriminate dumping of this product is a source of pollution; find out where the collection centre in your area is.

WARNING
The presence of whitish substances is caused by leaks of coolant in the oil.
The low viscosity is due to dilution with the fuel.

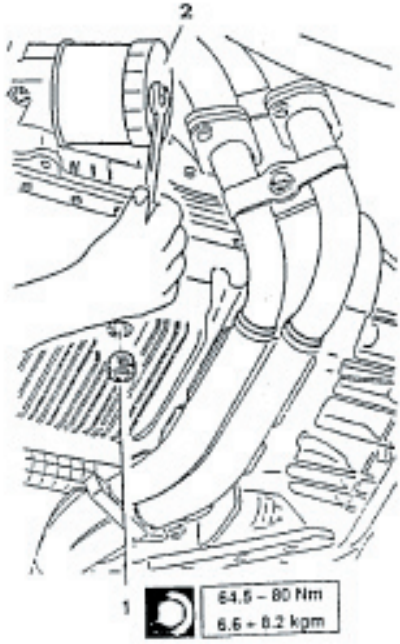

Alfawiki.nl

- Clean the drainage plug and screw it back onto the sump along with the relative gasket.
- Lubricate the gasket on the new filter with oil and screw the filter on tightly.
- Lower the vehicle.
- Refill the system with the specified oil in the quantity indicated
- Check that the level is correct with the dipstick.

CAUTION
The engine oil level should be checked when the vehicle is on level ground.
If the oil level exceeds the MAX mark a loss off pressure will be caused by the excessive evaporation of the oil.

- Screw on the oil cap, and run the engine for about 2 minutes, then switch off the engine and wait for a couple of minutes.
- Check the level of the oil and check for leaks.

TIGHTENING CYLINDER HEAD NUTS

CAUTION
The cylinder head nuts should only be tightened when the engine is cold.

- Remove the timing cover (see CHECKING AND ADJUSTING VALVE CLEARANCE)
- Loosen the nuts by one turn following the sequence indicated in the illustration. Lubricate the surface between the washer and nut with engine oil and tighten to the following torque:

82.65 - 91.35 Nm 8.43 - 9.3 kgm

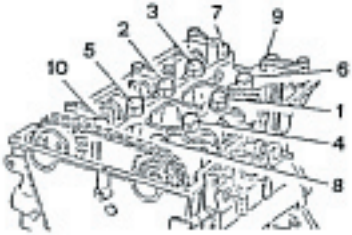

- Refit the timing cover by reversing the procedure followed for removal.

NOTE: **When removing or refitting the cylinder head, initially tighten to the following torque:**

76 - 84 Nm 7.75 - 8.56 kgm

After bench testing tighten again as before.

Alfawiki.nl

CHECKING AND ADJUSTING VALVE CLEARANCE

– Disconnect the negative cable from the battery.

1. Disconnect the oil vapour recovery hose from the timing cover.

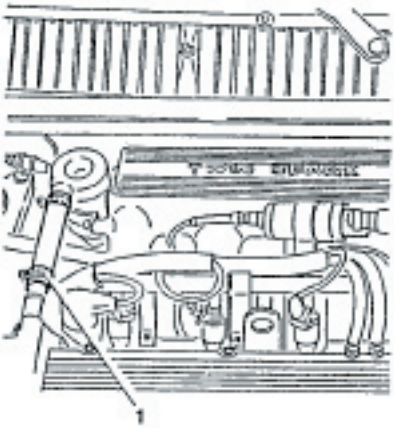

1. Disconnect the earth cables from the timing cover.

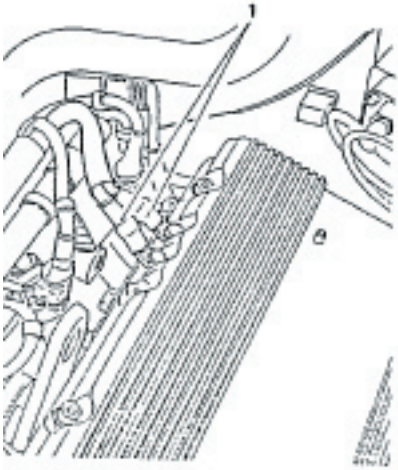

1. Remove the spark plug cover.
2. Disconnect the spark plug cables.

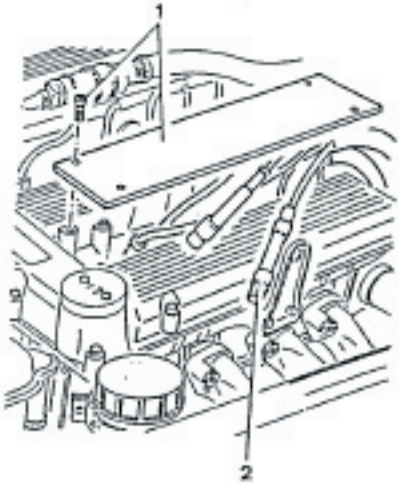

1. Remove the timing cover.
2. Remove the gasket.

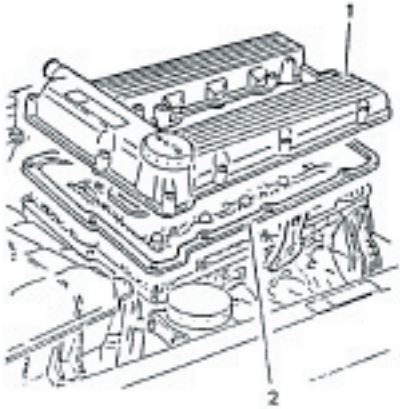

Alfawiki.nl

- Suck out the oil from the wells and put it back into the sump.
- Clean the spark plug wells, remove the spark plugs and plug the holes to prevent foreign materials from entering.

1. When the engine is cold use feeler gauge N° 1.825.018.000 (C.6.0197) to check that the clearance "S" between the cam heel radius and the valve cup ceiling is within the specified limits.

Valve clearance intake side	0.380 - 0.450 mm
Valve clearance Exhaust side	0.430 - 0.500 mm

1.825.018.000
(C.6.0197)

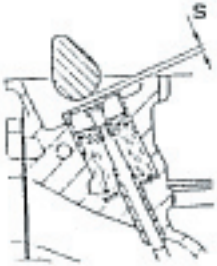

- If the valve clearance is not within the specified values register following the procedure described below.

1. Rotate the crankshaft until the reference notches on the camshafts are in line with those on the relative central caps.

1. Check that the reference notches stamped on the engine fly wheel and on the gearlever bell coincide when cylinder number 1 is at T.D.C. during the firing phase.

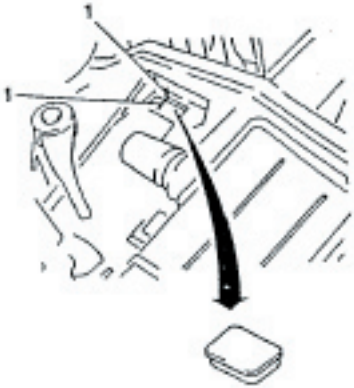

Alfawiki.nl

1. To check that the reference notches on the central caps are in the correct position, remove the caps and, using tool N° 1.820.116.000 (A.4.0199) and plate N° 1.820.123.000 (A.4.0221) check the relative angular value.

Angular value of the reference notches on the camshaft caps	
Intake shaft cap	5° 30'
Exhaust shaft cap	13° 15'

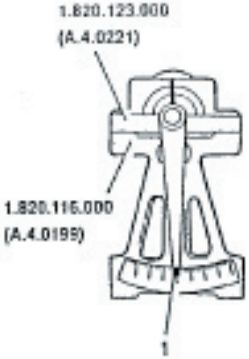

- If the reference notch is not positioned in accordance with the specified values make a correction by cutting a new notch on the cap.
- Refit the caps and rotate the crankshaft until the reference notches on the shafts are aligned with the new notches on the relative caps.

1. Loosen the screw securing the chain tensioner and push the chain downwards. Lock the chain in this position by re-tightening the relative screw.

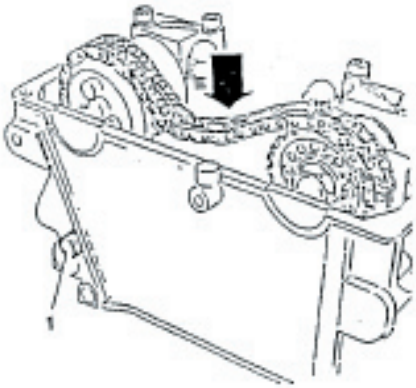

Adjusting valve clearance - Intake

1. Remove the three camshaft caps from the intake side.

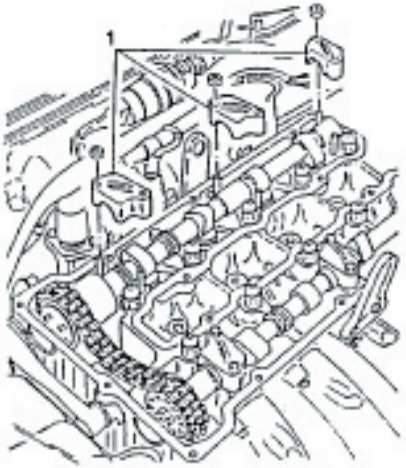

1. Remove the camshaft on the intake side with the chain and rest it in the middle of the head taking care not to move the chain in relation to the toothed wheel.
2. Withdraw a valve cup and its valve clearance regulation cap.

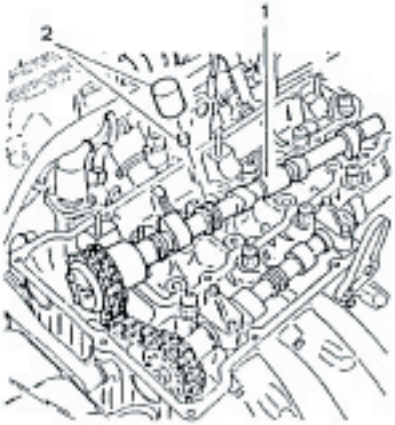

1. Measure the thickness "S" with the feeler gauge N° 1.827.002.000 (C.1.0108) and select a new cap of adequate thickness.

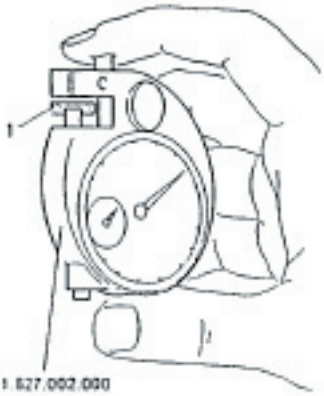

1.827.002.000
(C.1.0108)

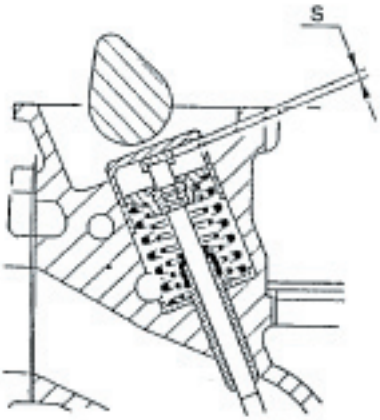

- Install the new cap and the valve cup after lubricating with engine oil.
- Repeat the procedure for the other cup-cap pairs.
- Re-position the camshaft taking care not to move the chain in relation to the toothed wheel.
- Remove the camshaft caps in the order shown below. Each cap has a number stamped on it.

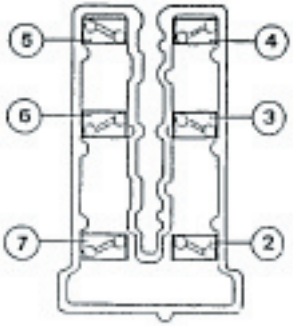

Alfawiki.nl

Adjusting valve clearance - exhaust

Proceed in the same way as for the intake valves taking care not to move the shaft when replacing the caps. The shaft should be lifted without moving the chain in relation to the toothed wheel.

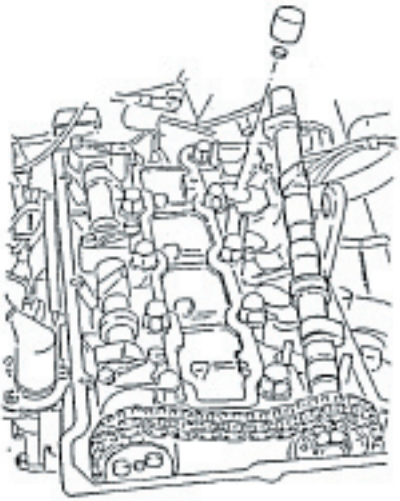

- Tighten the timing chain (see specific paragraph).
- Check the valve clearance again and adjust the timing (see specific paragraph).
- Refit all the components by reversing the procedures followed for removal.

CHECKING TIMING CHAIN TENSION

- Remove the timing cover (see CHECKING AND ADJUSTING VALVE CLEARANCE).

1. Loosen the screws securing the chain tensioner.

- Engage the highest gear, move the vehicle forward and keeping the vehicle is such a position that the chain stays taught, lock the screw securing the chain tensioner.

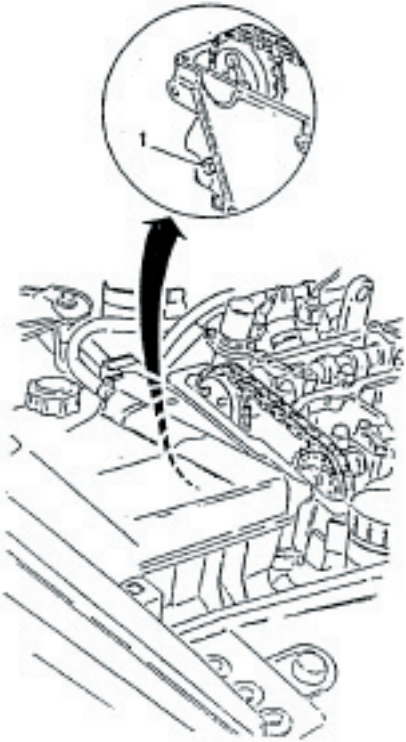

Alfawiki.nl

AUXILIARY UNIT BELTS

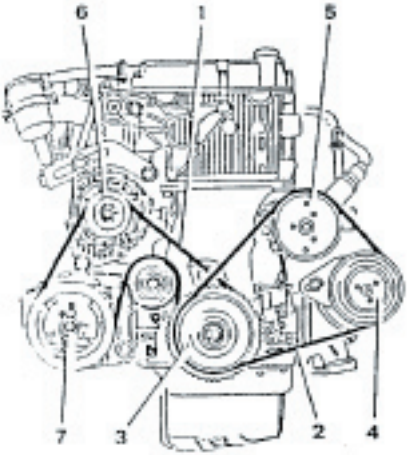

1. *Alternator - air conditioning compressor drive belt*
2. *Power steering pump - water pump drive belt*
3. *Engine pulley*
4. *Power steering pump*
5. *Water pump*
6. *Alternator*
7. *Air conditioning compressor*

NOTE:: **When checking the tensioning of the belt visually check its condition ensuring that it shows no sign of:**
- cuts
- cracks
- superficial wearing of the material (which appears smooth and shiny)
- dry or hardened parts (loss of adherence).
If any of these conditions are found replace the belt.

CAUTION:
If the belt comes into contact with oil or solvents the elasticity of the belt may be affected which will reduce its adherence.

WATER PUMP - POWER STEERING PUMP DRIVE BELT

Checking and tensioning

- Place the vehicle on a lift.

1. Remove the front right-hand wheel.

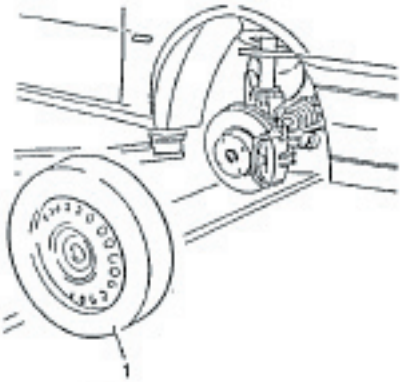

1. Remove the dustcover.

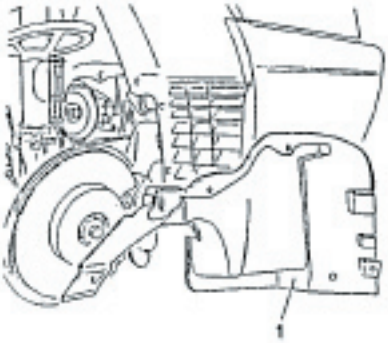

1. Working through the wheelhousing insert tool N° 1.824.018.000 (C.2.0131) as indicated in the illustration.

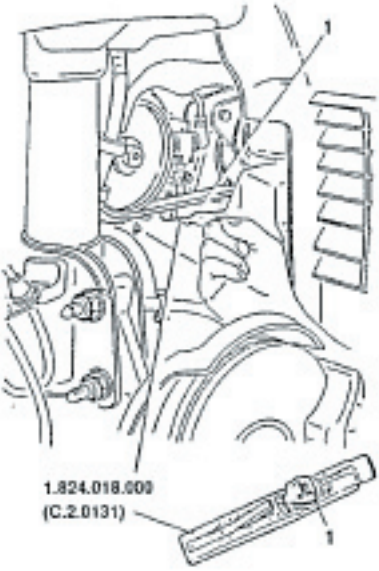

– Check that the tension values measured with a suitable tool, are within the specified limits.

Water pump - alternator control "POLY - VK4" belt tension	
During installation	350 - 400 N
Minimum	250 N
Re-tensioning	250 - 300 N

NOTE: The belt can be re-tensioned after a brief testing period, operating as follows:
- run the engine until it reaches normal operating temperature;
- run the engine for about 10 minutes;
- switch off the engine and wait until it cools;
- re-tighten the belt to the specified value.

– If the belt is not correctly tightened proceed as follows:

1. Working through the wheelhousing loosen the two screws securing the power steering pump.
2. Move the power steering pump to one side in order to increase the tension of the belt.
3. Tighten the upper nut securing the power steering pump and check the tension on the belt.

– If the tension is correct tighten the other screws securing the power steering pump.

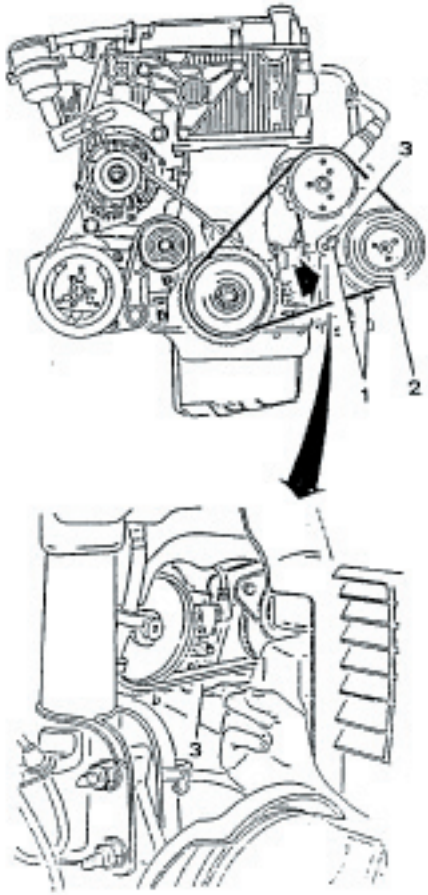

Alfawiki.nl

Substitution

- Place the vehicle on a lift.
- Remove the front right-hand wheel.
- Remove the dustcover.

1. Working through the wheelhousing loosen the two screws securing the power steering pump.
2. Remove the water pump - power steering pump drive belt.

- Install a new belt by reversing the procedure followed for removal.

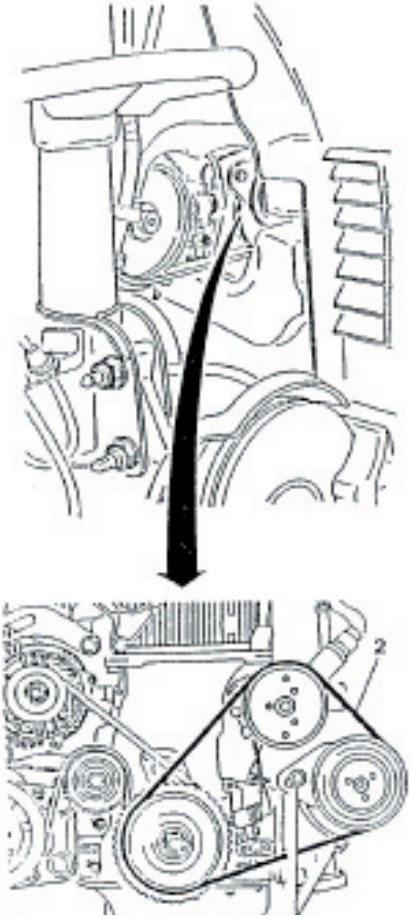

AIR CONDITIONING COMPRESSOR - ALTERNATOR DRIVE BELT

Checking and tensioning

1. Loosen the screws securing the expansion tank and without disconnecting the hoses, move it to one side.
2. Working from the engine compartment measure the tension on the belt using tool N° 1.824.018.000 (C.2.0131), as indicated in the illustration.

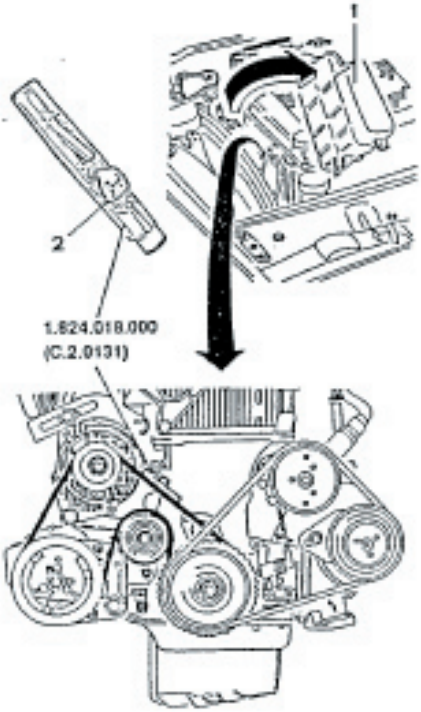

Alfawiki.nl

– Using the specific tool, check that the tension values are within the specified limits.

Air conditioning compressor - alternator drive "POLY-VK5" belt tension	
During installation	400 - 450 N
Minimum	300 N
Re-tensioning	300 - 350 N

NOTE: The belt can be re-tensioned after a brief testing period, operating as follows:
- run the engine until it reaches normal operating temperature;
- run the engine for about 10 minutes;
- switch off the engine and wait until it cools;
- re-tighten the belt to the specified value.

– If the belt is not correctly tightened, proceed as follows:

1. Unscrew the two screws securing the alternator.
2. Adjust the micrometric tensioner screw until the specified belt tension is obtained.

– Tighten the two screws securing the alternator.

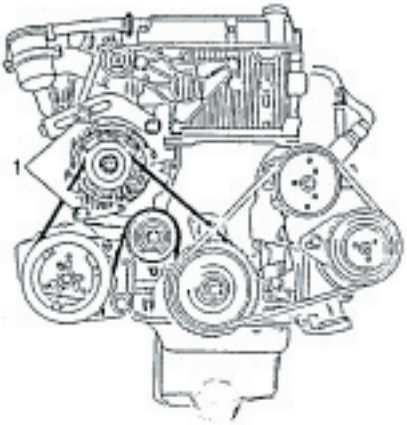

Substitution

– Place the vehicle on a lift.

1. Remove the front right-hand wheel.

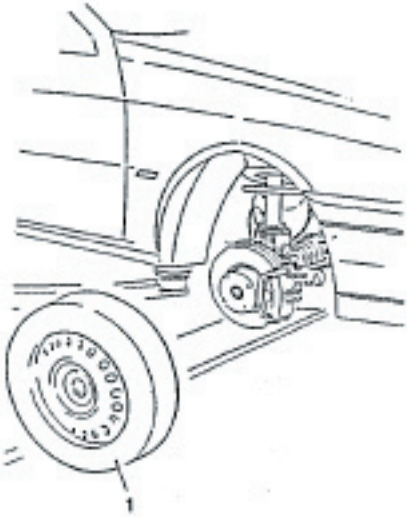

Alfawiki.nl

1 Remove the dustcover.

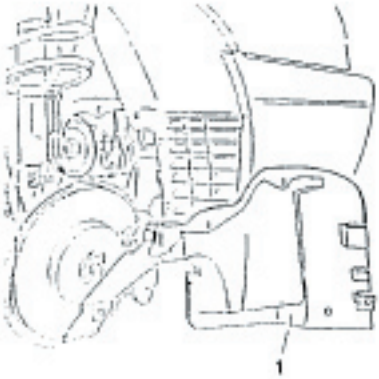

1. Remove the engine r.p.m. and timing sensor together with its support bracket, and move it to one side.

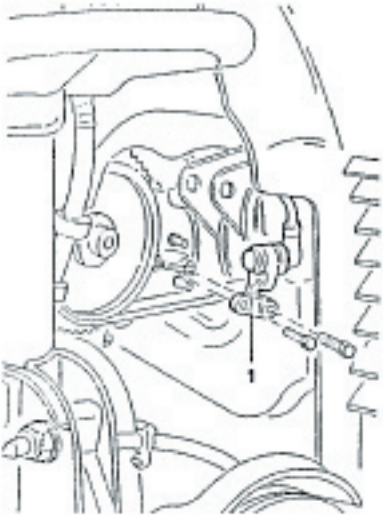

During refitting check the air gap between the r.p.m. and timing sensor and the toothed pulley.

Air gap between r.p.m. and timing sensor and phonic wheel
0.5 - 1.5 mm

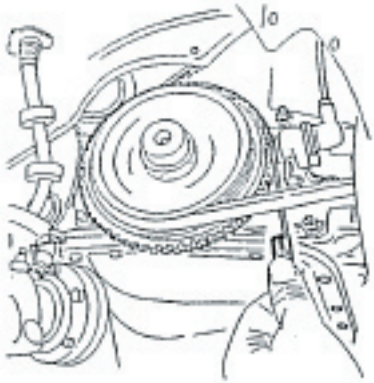

– Remove water pump - power steering pump drive belt (see specific paragraph).

1. Loosen the screws securing the expansion tank and, without disconnecting the hoses, move it to one side.

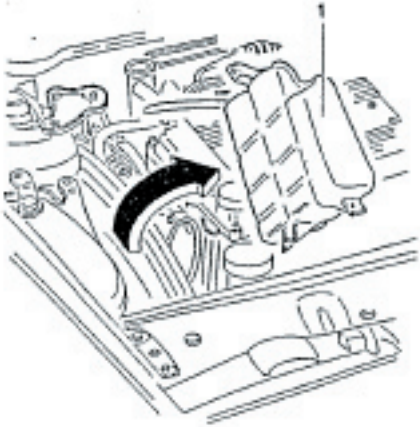

Alfawiki.nl

1. Unscrew the two screws securing the alternator.
2. Adjust the micrometric tensioner screw to reduce the tension on the belt.
3. Remove the air conditioner - alternator drive belt.

– Fit a new belt by reversing the procedure followed for removal.

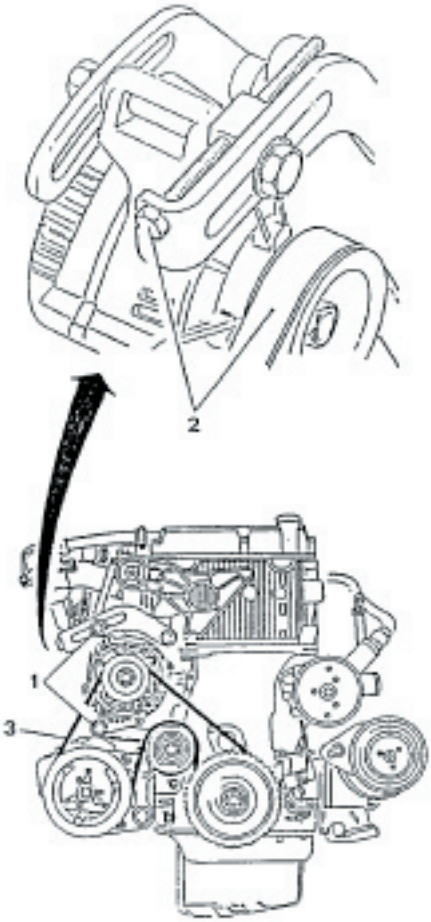

CHECKING PRESSURE AND SEALING OF THE FUEL CIRCUIT

1. Disconnect the fuel delivery hose from the supply manifold.
2. Connect a pressure meter and a "T" union to the ends of the previously disconnected inlet hose.

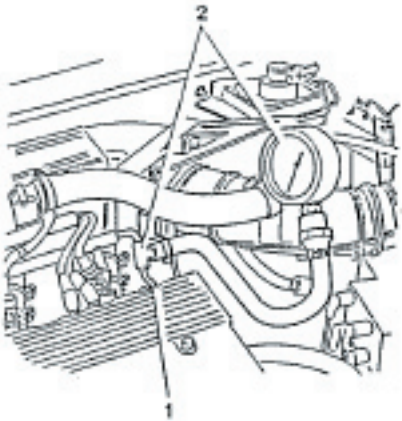

1. Disconnect the pressure regulator vacuum intake hose from the air intake box in order to prevent variations in engine r.p.m. from influencing the readings.

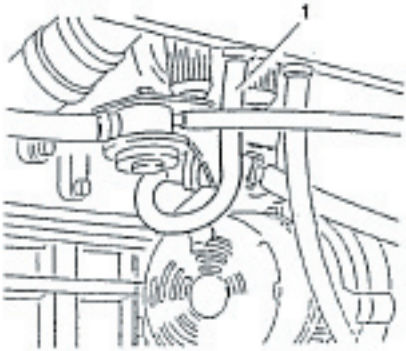

Alfawiki.nl

- Start the engine and run at idle speed and check that the pressure of the fuel is within the specified limits.

Fuel pressure at idle speed
2.8 - 3.2 bar (2.9 - 3.3 kg/cm²)

- Re-connect the vacuum intake hose to the air intake box. At idle speed the pressure must decrease by 0.5 bars and then increase when the throttle valve opens. If this does not happen, check for leaks in the vacuum intake hose of the fuel pressure regulator.

NOTE: **When fuel is visibly leaking or there is a persistent smell of petrol, test the sealing of the fuel supply circuit.**

CAUTION:
Keep a fire extinguisher to hand in case fuel is leaking.
Do not smoke.

1. With the pressure meter connected to the engine when running at idle speed, squeeze the hose just after the pressure regulator and check that the pressure increases to approximately 4 bars.
   Do not let the pressure exceed this value.

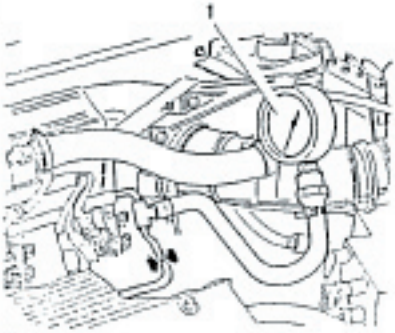

CHECKING SEALING OF FUEL VAPOUR RECOVERY SYSTEM

DUE FOR PUBLICATION

Alfawiki.nl

REPLACING THE AIR CLEANER CARTRIDGE

1. Loosen the clamp fastening the corrugated sleeve to the air- flow meter.
2. Loosen the screws securing the air cleaner cover.
3. Loosen the screw securing the air-flow meter support bracket.

1. Lift the air cleaner cover - air-flow meter assembly without disconnecting the air-flow meter from its electrical connection.
2. Remove the filter element.

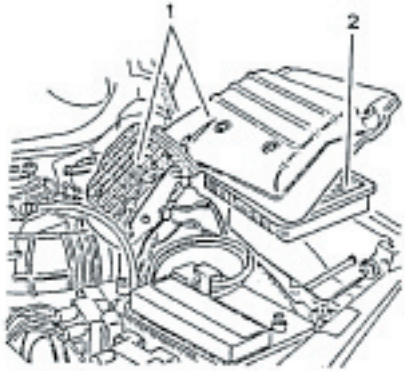

CAUTION:
Any attempt to clean the air cleaner filter may result in damage to the filter and compromise the correct functioning of the engine supply system.

- Carefully clean the container holding the filter element.
- Position the new filter element.
- Refit the filter cover - air-flow meter assembly by reversing the procedure followed for removal.

NOTE: If the filter shows signs of oil contamination, check the entire air circuit for possible infiltrations.

CHECKING SEALING OF THE AIR CIRCUIT

- Start the engine and run at idle speed.
- Using a brush, paint the junctions of the ducts downstream of the air-flow meter with soap solution.

Check that the solution is not sucked into the ducts and that the r.p.m. remains constant.

Alfawiki.nl

CING THE FUEL

he vehicle on a lift.
e engine; disconnect the relay from the fuel
see GROUP 40) and wait until the engine
through lack of fuel
he vehicle and remove the fuel filter cover

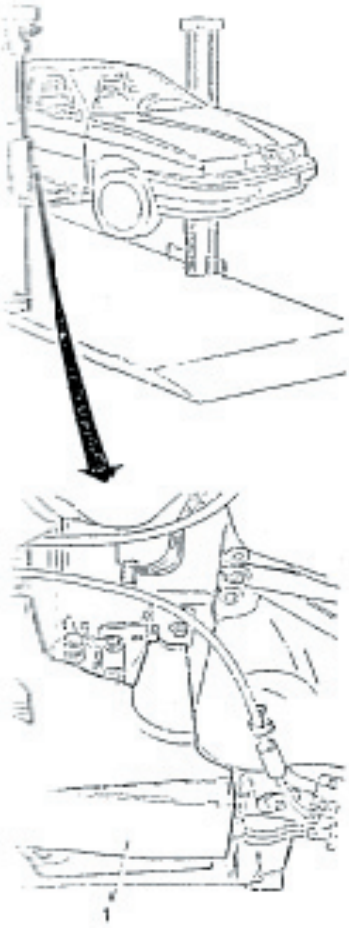

1. Unscrew the inlet and outlet connections carrying fuel to and from the filter.
- Collect the fuel in a suitable container and plug the ends of the connections without bending or twisting the pipes.
2. Remove the fuel filter together with the supporting clamp.

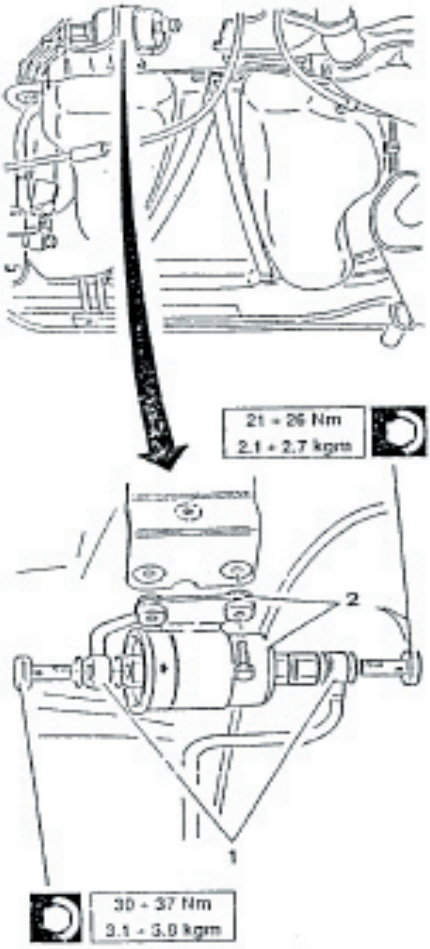

Alfawiki.nl

1. Separate the fuel filter from the clamp on a bench.

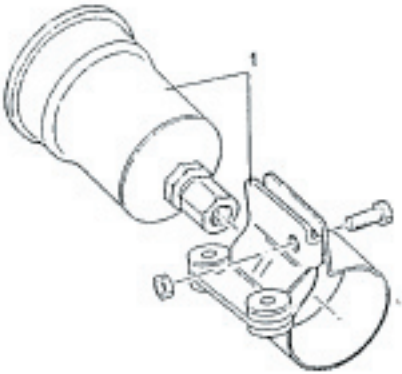

- Fit a new filter by reversing the procedure followed for removal, following the indications given below:
  - replace the copper gaskets on the connections;
  - fit the filter so that the arrow stamped onto it points in the direction in which the fuel will flow.

CHECKING EXHAUST EMISSIONS

CAUTION:
This operation should be carried out in the open or in a suitable location which fulfills the requirements of the current local regulations.

NOTE: **The control must be carried out with the engine at idle speed and at operating temperature (after the electric fan has cut-in and then cut-off again)**
If the idle speed is not within the specified values check the operation of the constant idle speed actuator.

- Check that the engine oil level is correct and that the air cleaner filter cartridge is clean.
- Start the engine and run it at idle speed.

1. Introduce the probe of the analyzer into the end of the exhaust pipe and check that the CO and HC percentages are within the specified limits.

Idle speed	750 ± 50 r.p.m.
% of exhaust CO (volume)	≤ 0.5
Exhaust HC p.p.m.	≤ 50

If after checking the values are not found to be within the specified limits, consult the fault diagnosis located at the end of GROUP 04 - ENGINE MANUAL and refer to the diagnosis procedure employing the specific tool described in the "ELECTRICAL -ELECTRONIC DIAGNOSIS" MANUAL.

NOTE: **THE CO PERCENTAGE CANNOT BE ADJUSTED!**
If the values are not within the specified limits it is necessary to act on the faulty components.

CHECKING THE LAMBDA PROBE

See "ELECTRICAL - ELECTRONIC DIAGNOSIS" MANUAL.

Alfawiki.nl

CHECKING AND REPLACING THE SPARK PLUGS

The spark plugs are installed in series and may be of the surface discharge type with four peripheral points and one central electrode or of the type with one peripheral point and one central electrode.
The distance between electrodes on the first type does not need to be adjusted, but on the second a precise measurement must be maintained.

Firing order	1 - 3 - 4 - 2

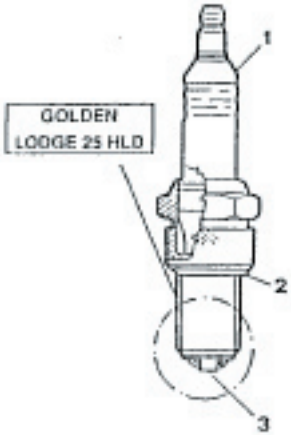

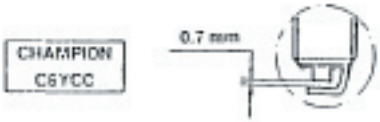

1 Ceramic
2 Gasket
3 Electrode

MAINTENANCE

Periodically check to see if the electrode is dirty.
Also check to see if it is worn or the ceramic insulation broken.
Replace the spark plug if any of these faults are detected.
When refitting, lubricate the threads using ISECO MOLYKOTE A oil and tighten the spark plugs to a torque of:

28 - 34.6 Nm (2.85 - 3.5 kgm)

CAUTION
Do not use spark plugs of a type or size different from those specified as this may cause damage to the engine and alter the level of toxic exhaust fumes.

CAUTION
A dirty or burnt out spark plug is often symptomatic of a malfunction in the engine's supply system.
For example:
- **Traces of carbon powder: incorrect mixture, air cleaner very dirty;**
- **Oil stains: infiltrations of oil from the piston rings;**
- **Ash formation: presence of aluminium material especially in oil;**
- **Melted electrodes: overheating due to unsuitable combustion, valve defects.**
- **Fast-wearing electrodes: damaging additives present in the fuel or oil, pinging, overheating;**

For greater detail regarding these problems refer to the fault diagnosis contained in GROUPS 01 and 04.

Alfawiki.nl

TESTING THE SEAL ON ENGINE COOLING SYSTEM PRESSURIZED CAP

- Use a seal test instrument.

1. Screw the connection onto the lower end of the seal test instrument.
2. Fit the pressurized cap of the expansion tank onto the connection.
3. Pressurize the piston manually and check that the release valve opens at the correct pressure which can be read off the instrument.

Pressure setting of the pressurized cap
0.98 ± 0.1 bar (1 ± 0.1 kg/cm²)

CHECKING SEALING OF THE ENGINE COOLING SYSTEM

- Unscrew and remove the pressurized cap from the expansion tank.

1. Screw the connection of the test instrument onto the neck of the expansion tank.
2. Pressurize the system manually and check that the pressure is maintained at the prescribed level. If the pressure varies, check that there are no leaks in the sleeves or radiator.

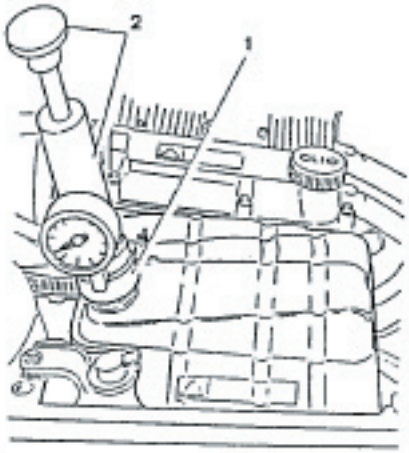

Hydraulic system control pressure
1.08 bar (1.1 kg/cm²)

CAUTION
For safety reasons the pressure during these checks with the test instrument should not exceed 1.38 bars (1.4 kg/cm²).

Alfawiki.nl

REPLACING ENGINE COOLANT FLUID

1 Unscrew and remove the cap from the expansion tank.

CAUTION
Never remove the cap from the expansion tank when the engine is warm!

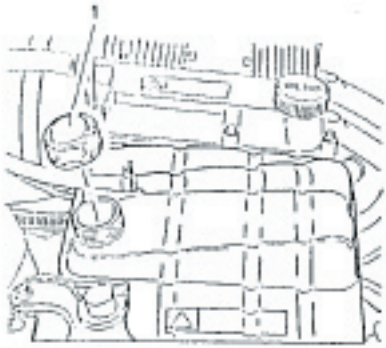

1 Loosen the clamps securing the sleeve carrying the engine coolant to the pump from the radiator and disconnect the sleeve. Drain off the engine coolant into a suitable container placed under the vehicle.

- Re-connect the radiator - water pump sleeve and all the hoses which may have been previously disconnected. Check that the clamps are tight.
- Refill the system up to the MAX level on the expansion tank.
  Indications regarding the quality and quantity of engine fluid to be used for refilling are given in the table below.

Minimum temperature		-40° C
Antifreeze concentrated	Alfa Romeo Antifreeze	4.6 litres (35%)
Distilled water		3.7 litres (45%)
Ready-for-use antifreeze	Alfa Romeo Climafluid Permanent -40°C	8.3 litres

- Start the engine and run it at normal operating temperature until the opening of the thermostat frees the residual air from the circuit.
- When the engine is cold, top-up to the MAX mark on the expansion tank.
- Screw the pressurized cap back on to the expansion tank and tighten it.

CAUTION
It is unadvisable to mix different types of antifreeze.
Do not use rust-proofing additives as they may not be compatible with the antifreeze.

ENGINE MAINTENANCE OPERATIONS
For the V6 engine
(AR 67301)

REPLACING ENGINE OIL AND FILTER

CAUTION
Engine oil is harmful to the skin. Keep all contact with the skin to a minimum. Wash off any oil with soap and water.

- Place the vehicle on a lift.
1. When the engine is warm, remove the oil cap.
2. Remove the oil dipstick.

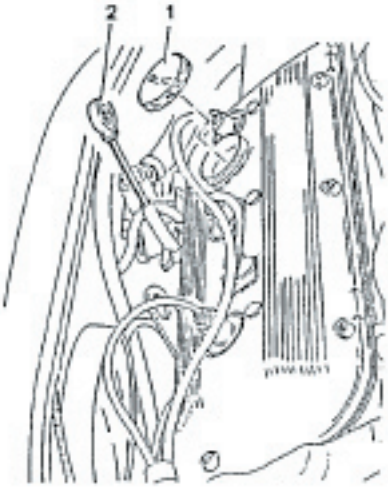

- Raise the vehicle.
1. Unscrew the drainage plug and let the oil drain off for at least 15 minutes.

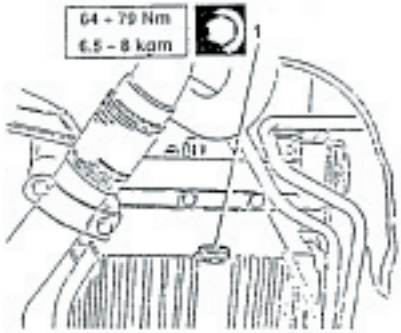

CAUTION
Indiscriminate dumping of oil causes environmental pollution. Take the oil to a collection point in your area.

CAUTION
The presence of a whitish substance is cause by engine coolant leaking into the oil circuit.
Low viscosity is caused by dilution with fuel.

1. Working from underneath the vehicle unlock and remove the oil filter using the special tool.

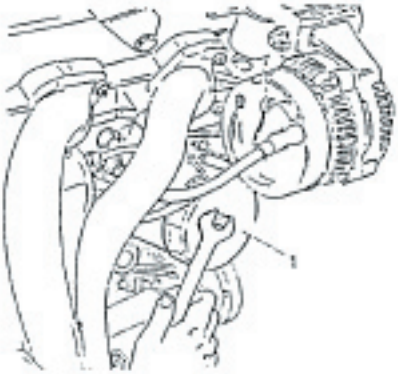

Alfawiki.nl

- Clean the drainage plug and screw it back onto the sump along with the relative gasket.
- Lubricate the gasket on the new filter with oil and hand screw it back onto the sump along with the relative gasket.
- Lower the vehicle.
- Refill the system with the specified oil in the quantity indicated.
- Check that the level is correct.

CAUTION
The engine oil level should be checked when the vehicle is on level ground.
If the oil level exceeds the MAX mark, a loss of pressure will be caused by the excessive evaporation of the oil.

- Screw on the oil cap and run the engine for about 2 minutes, then switch off the engine and wait for a couple of minutes.
- Check the level of the oil and check for leaks.

TIGHTENING THE CYLINDER HEAD NUTS

CAUTION
The cylinder head nuts should only be tightened when the engine is cold.

- Remove the timing covers (see "CHECKING AND ADJUSTING VALVE CLEARANCE").
- Loosen the nuts by one turn following the sequence indicated in the illustration. Lubricate the surface between the washer and the nut with engine oil and tighten to the following torque:

97.8 - 108.2 Nm 10 - 11 kgm

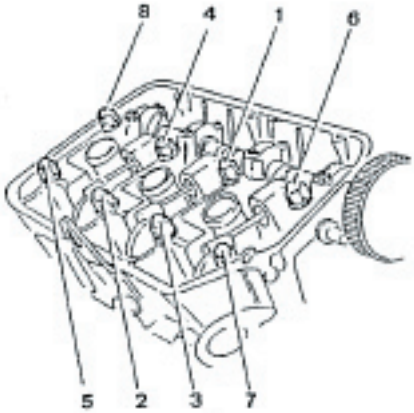

NOTE: **The diagram shows the right-hand head; the tightening order is symmetrical for the left-hand head.**

- Refit all the components by reversing the procedure followed for removal.

NOTE: **When removing or refitting the cylinder head, initially tighten to the following torque:**

68.5 - 97.8 Nm 9 - 10 kgm

After bench testing, tighten again as before.

Alfawiki.nl

CHECKING AND ADJUSTING VALVE CLEARANCE

- Carry out the operations given in "REPLACING THE TIMING BELT" up to and including the removal of the timing belt front cover.

1. Remove the timing covers and relative gaskets.

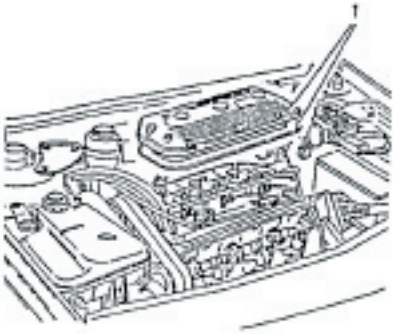

- Suck out the oil from the wells and put it back in the sump.

1. When the engine is cold, check that the clearance between the cam heel radius and the ceiling of the valve cups is within the prescribed values.

Valve clearance intake side "G_3"	0.475 - 0.500 mm
Valve clearance exhaust side "G_4"	0.310 - 0.345 mm

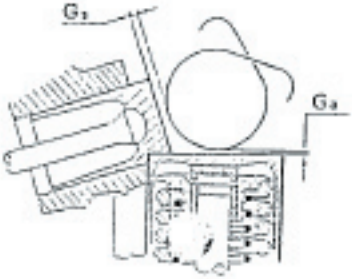

NOTE: To measure the intake valve clearance use feeler gauge N° 1.825.018.000 (C.6.0197).

Intake

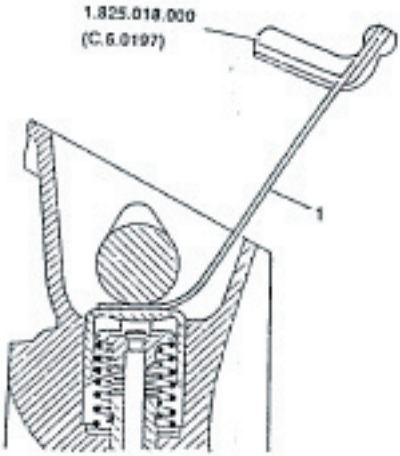

Exhaust

Alfawiki.nl

- If the valve clearance is not within the specified values, adjust as follows:

Adjusting valve clearance - intake

1. Rotate the crankshaft until the reference notches on the camshafts are in line with those on the relative caps.

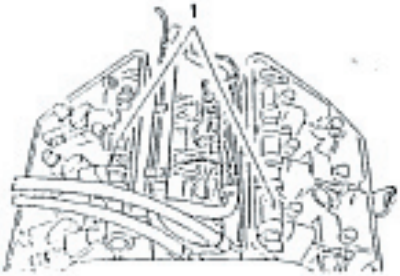

1. Remove the front right-hand wheel.

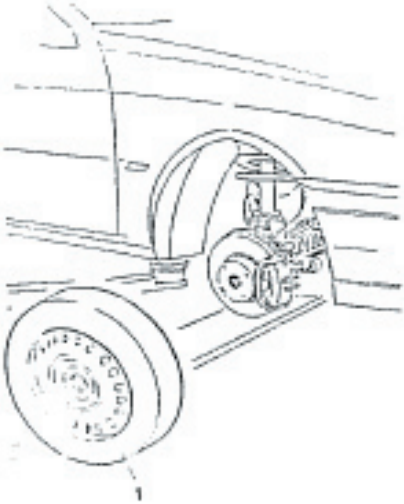

1. Remove the dustcover from the front right-hand wheelhousing.

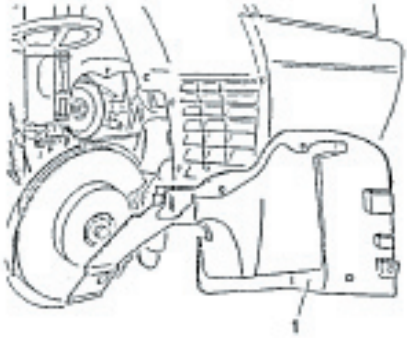

1. Check that the reference notch on the phonic wheel is aligned with the pin on the front cover of the engine block.

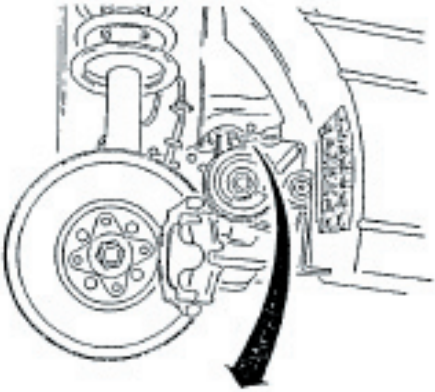

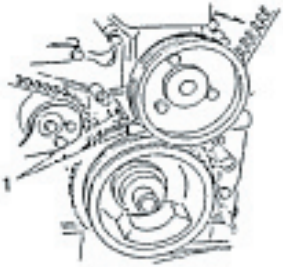

Alfawiki.nl

1. Loosen the screws securing the pulley to the supporting hub.
2. Using tool N° 1.820.051.000 (A.2.0361), unlock and remove the nut securing the hub.

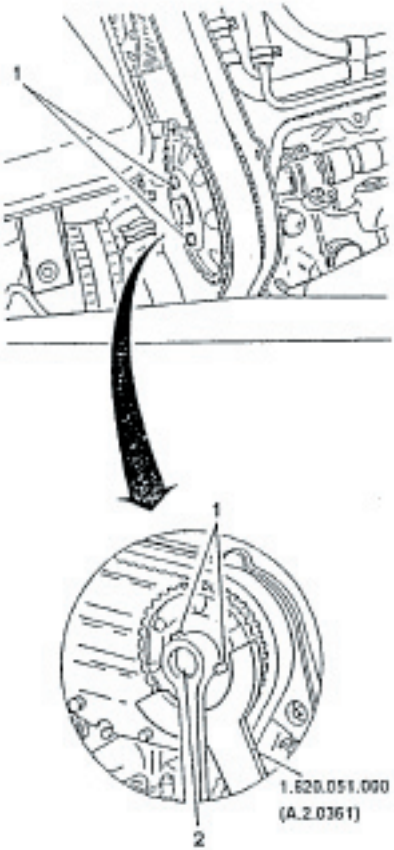

- Remove the previously loosened screws securing the pulley to the hub.
1. Install tool N° 1.820.232.000 on the timing pulley and tighten the three screws on the support hub.

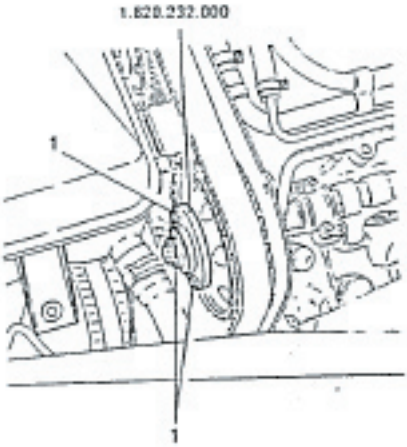

1. Tighten the nut of tool N° 1.820.232.000 and locking the pulley with tool N° 1.820.051.000 (A.2.0361), move the pulley and hub forward until they disengage from the camshaft.

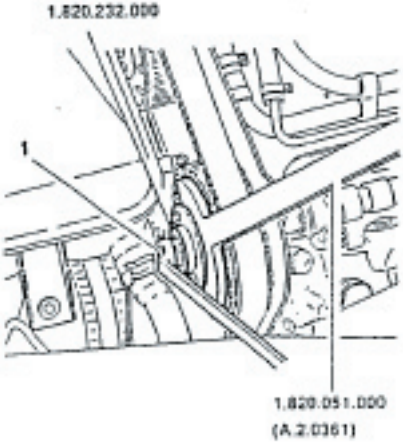

Alfawiki.nl

1. Remove the camshaft caps.

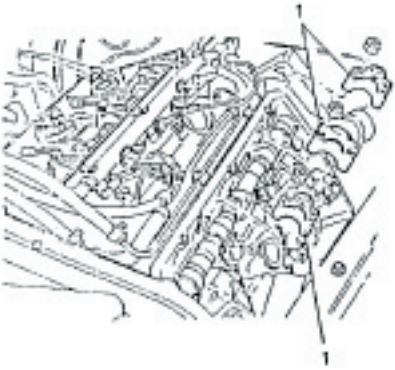

1. Remove the camshaft by lifting it from the rear end.
2. Withdraw a cup and relative valve clearance adjustment cap.

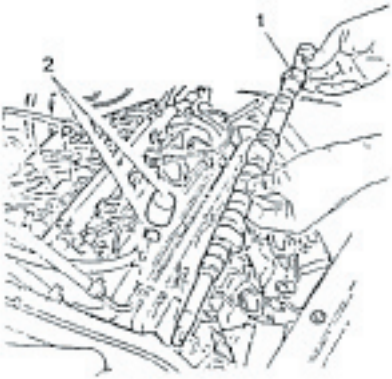

1. Measure the thickness of the caps with the specific dial gauge N° 1.827.002.000 (C.1.0108) and considering the difference in relation to the values measured previously, choose those suitable to re-establish the correct clearance of each valve from series N° 1.820.150.000 (R.9.0001).

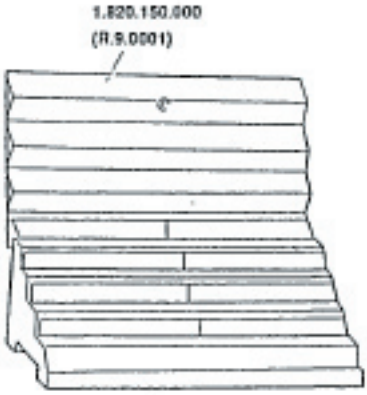

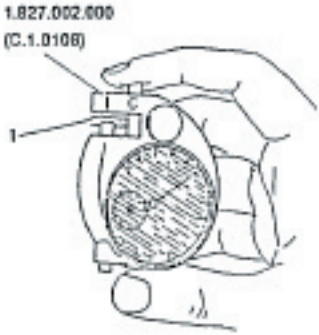

- Install the new cap and valve cup after lubricating with engine oil.
- Proceed in the same way for the remaining pairs of caps and valves.

Alfawiki.nl

1. Remove the central part of tool N° 1.820.232.000
2. Install the camshaft checking through the hole in the tool, that the key is correctly positioned.
- Push the timing drive belt to the initial installation position and remove tool N° 1.820.232.000.
3. Tighten the three screws securing the pulley and the nut securing the hub, to the correct torque by applying a counter-torque with tool N° 1.820.051.000 (A.2.0361).
4. Install the camshaft caps and tighten the nuts to the specified torque.

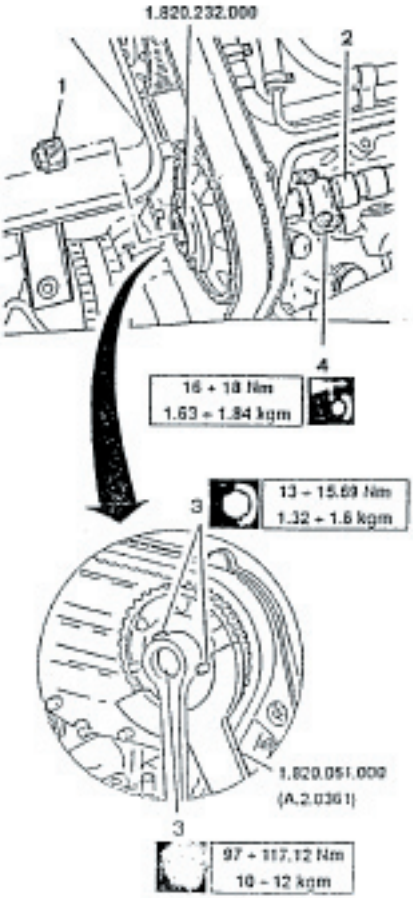

Adjusting valve clearance - exhaust

1. Using tool N° 1.822.016.000 (A.5.0220) loosen the counternut locking the regulation screws by acting on the intermediate lever of the tool.
2. Using the same tool act on the regulation screw until the correct clearance is obtained.
- Lock the counternut and check the valve clearance again.

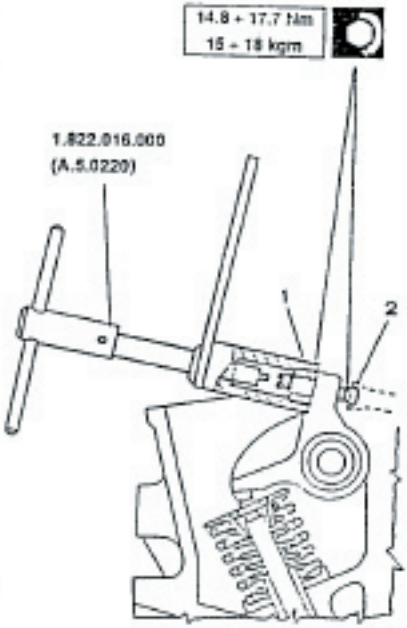

Alfawiki.nl

- Before refitting correctly position the camshafts as follows
1 Install tool n° 1.825.013.000 (C.6.0183), fitted with a dial gauge in the spark plug seating of the first cylinder.
- Rotate the crankshaft until the piston of the first cylinder is at T.D.C. in the firing phase.
2 Check the alignment of the reference notches on the camshafts with those of the relative caps.

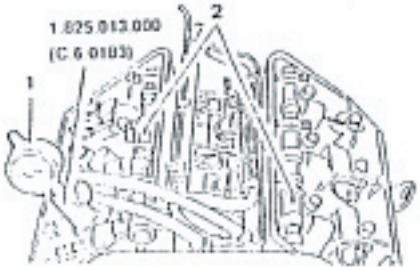

1. Check that the notch on the phonic wheel is aligned with the pin on the front cover of the engine block.

- Refit by reversing the procedure followed for removal.

REPLACING THE TIMING BELT

Disassembly

1. Place the vehicle on a lift.
- Disconnect the negative cable from the battery.

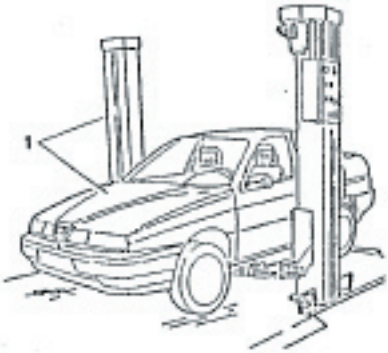

1. Remove the corrugated sleeve together with the constant idle speed actuator air intake and oil vapour recirculation hose.

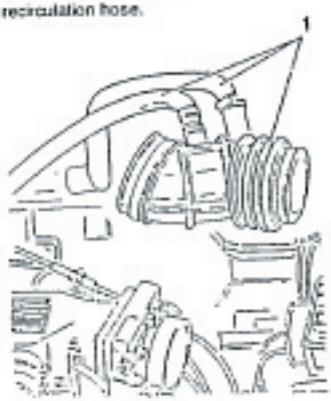

Alfawiki.nl

- Disconnect the spark plug cables.

1. Disconnect the electrical connection from the constant idle speed actuator.

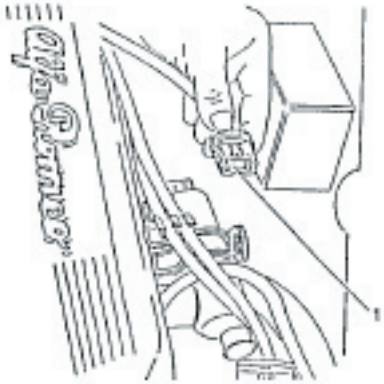

1. Disconnect the electrical connection from the throttle valve potentiometer.
2. Disconnect the accelerator cable from the throttle valve.
3. Disconnect the pressure regulator vacuum intake hose from the air intake box.
4. Disconnect the fuel vapour recirculation hose from the air intake box.

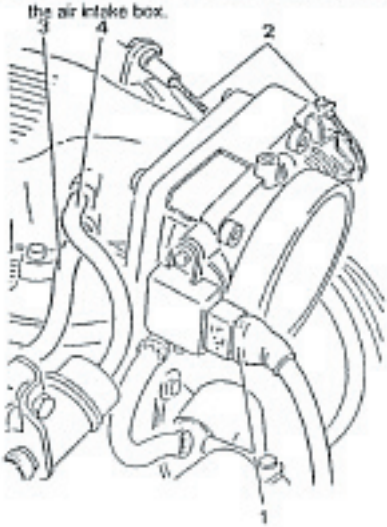

1. Disconnect the engine coolant delivery hose from the throttle body and plug the ends.
2. Disconnect the hose returning the engine coolant to the expansion tank from the throttle body and plug the ends.

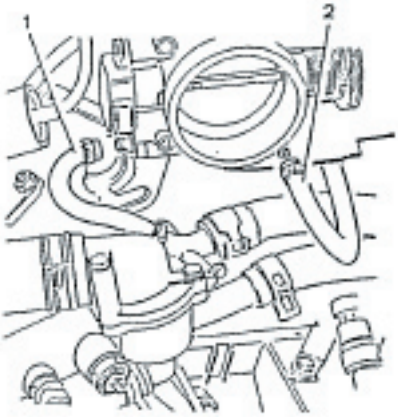

1. Disconnect the servo brake vacuum intake hose from the air intake box.

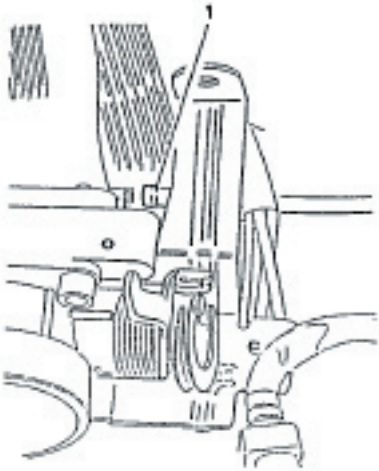

Alfawiki.nl

1. Disconnect the oil vapour recovery hose from the timing cover.
2. Disconnect the oil recovery hose from the separator.

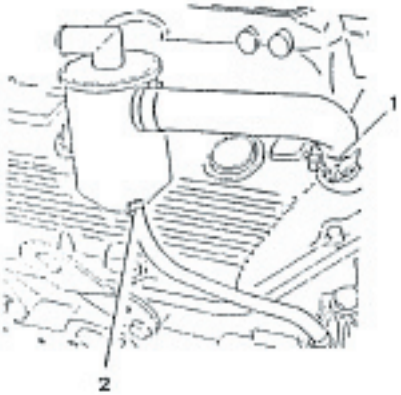

1. Loosen the clamps securing the intake ducts to the air intake box.

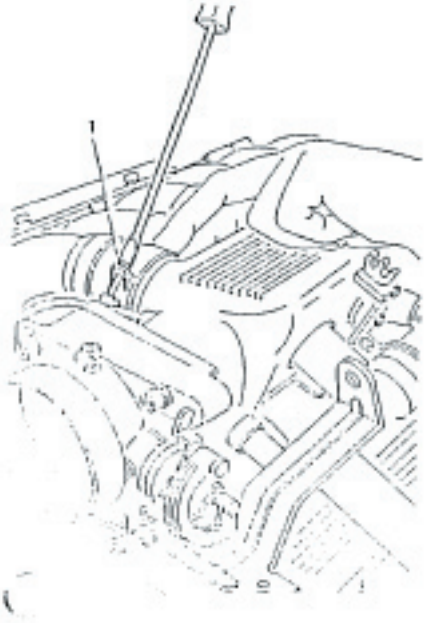

1. Loosen the screws and remove the air intake box after freeing the cables and hoses from the clamps fixed to it.

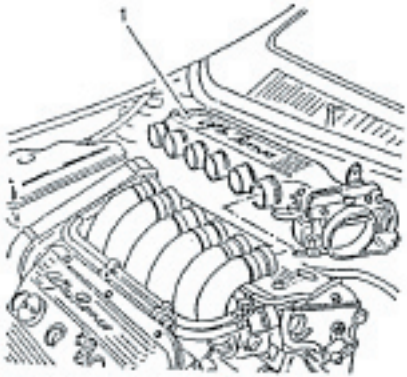

1. Loosen the screws and remove the air intake ducts.
2. Remove the gaskets.

CAUTION
Plug the ends of the intake ducts to prevent foreign bodies from entering.

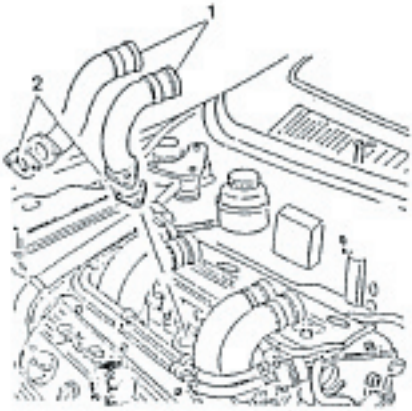

Alfawiki.nl

1. Remove the front cover from the timing belt.

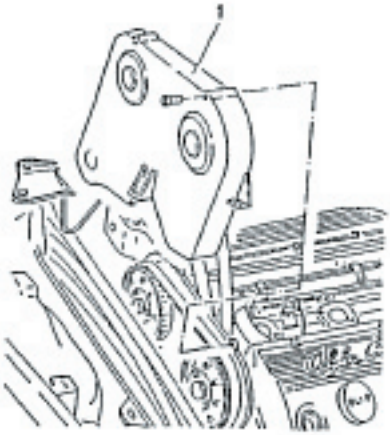

1. Remove the front right-hand wheel.

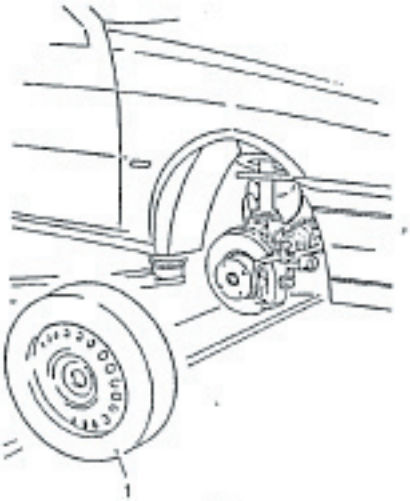

1. Remove the dustcover from the right-hand wheel-housing.

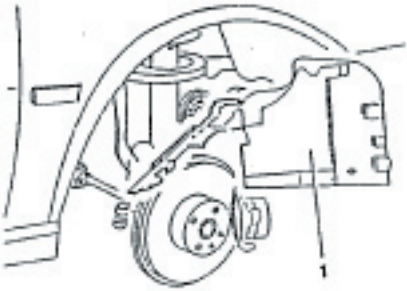

- Raise the vehicle.

1. Remove the cover from the hydraulic belt tensioner.

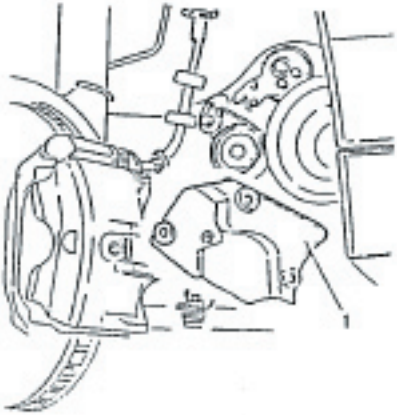

Alfawiki.nl

– Remove the air conditioning compressor drive belt. (see specific procedure).

1 Loosen the two screws securing the belt tensioner for the water pump - alternator drive belt.

2 Loosen the screw and remove the pulley from the tensioner.

3 Remove the water pump pulley.

4 Remove the water pump - alternator drive belt.

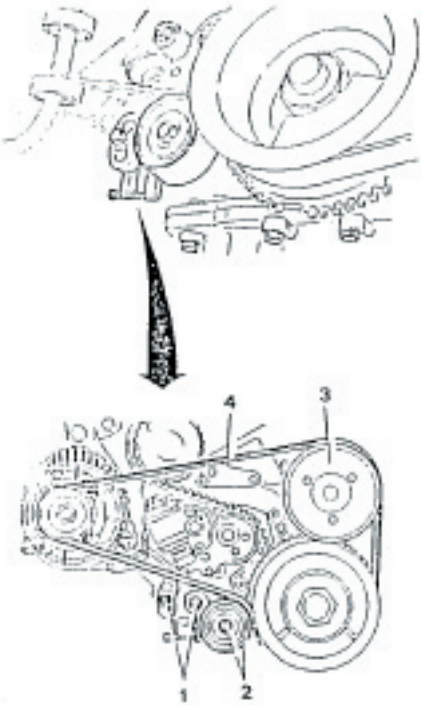

1 Remove the timing belt cover.

1. Remove the r.p.m. and timing sensor together with its support.

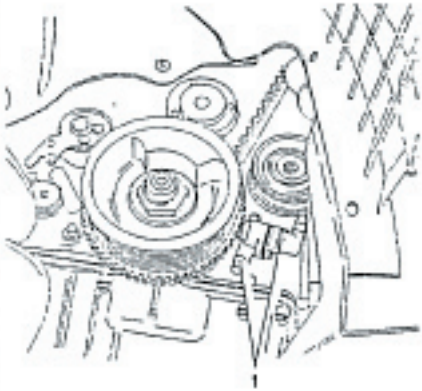

Alfawiki.nl

- Lower the vehicle.

1. Remove the timing covers and relative gaskets.

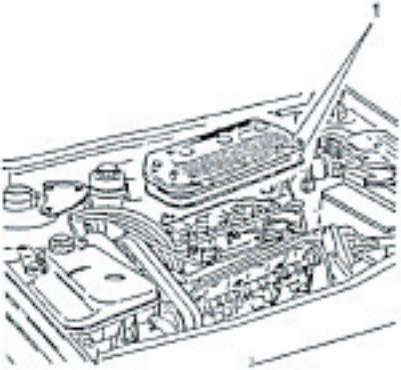

1. Rotate the crankshaft until the reference notches on the camshafts and those on the relative caps are in line.

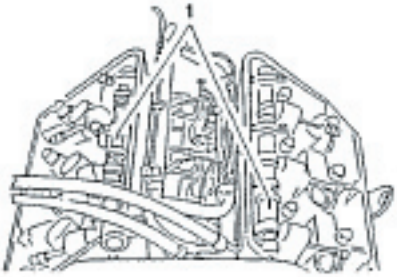

1. Check that the reference notch on the phonic wheel is aligned with the pin on the front cover of the engine block.

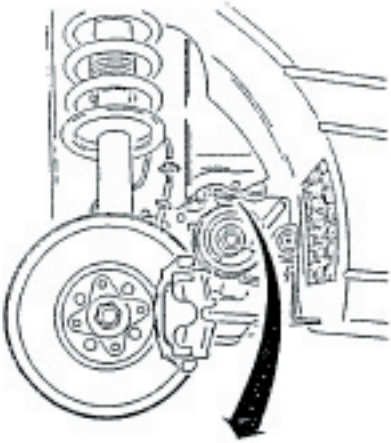

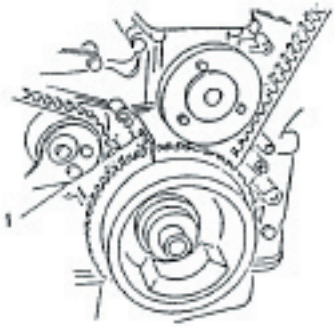

- Raise the vehicle.

Alfawiki.nl

1. Raise the arm of the hydraulic belt tensioner and lock the belt tensioner with tool N° 1.820.053.000 (A.2.0363)

NOTE: To insert tool N° 1.820.053.000 (A.2.0363) it is necessary to align the housing hole with the hole on the body of the belt tensioner.

2. Loosen the two nuts securing the body of the belt tensioner to the engine block.
- Rotate the hydraulic belt tensioner upwards and lock it in this position by tightening the previously loosened nuts.

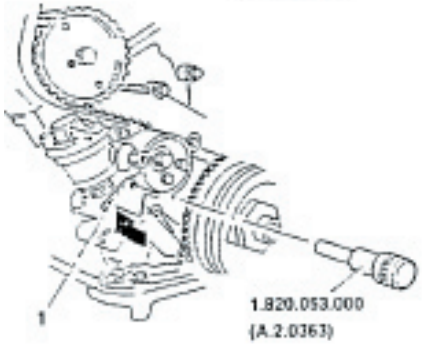

- Lower the vehicle and withdraw the timing belt from its pulleys.
1. Raise the vehicle and remove the timing belt.

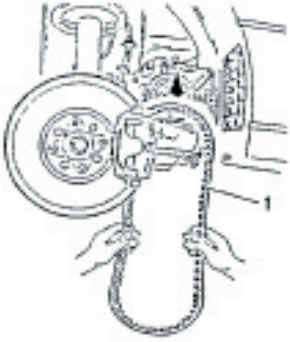

Refitting

1. Install tool N° 1.825.013.000 (C.6.0183) fitted with a dial gauge into the seat of the spark plug of the first cylinder.
2. Check that the reference notches on the camshafts are in line with those on the relative caps (cylinder N° 1 at T.D.C. during firing).
- Check that the reference notch on the phonic wheel is in line with the pin on the front cover of the engine block.

CAUTION
During refitting, check that the above conditions do not vary.

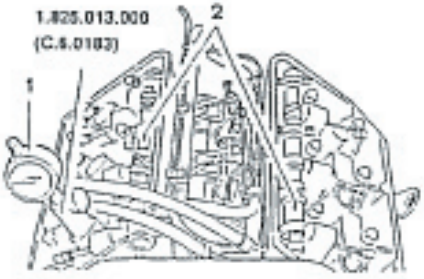

Alfawiki.nl

- Slide the timing belt on, keeping the arms taught and following the following order for installation:
  - toothed pulley of crank shaft
  - toothed pulley of left-hand head
  - toothed pulley of right-hand head
  - toothed pulley of oil pump control
  - belt tensioner pulley.

1. Loosen the two nuts securing the belt tensioner.

- Rotate the crankshaft in the normal direction of rotation and lock the two nuts securing the tensioner.

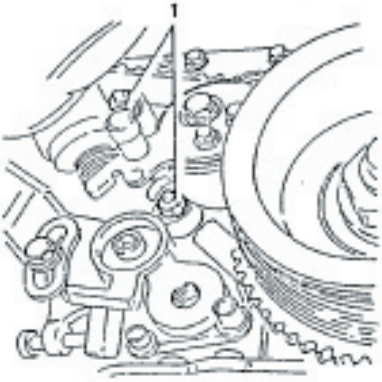

- Rotate the crankshaft in the usual direction of rotation until the piston of the first cylinder is a T.D.C during the firing phase.

1. Check that the reference notches on the camshafts are in line with those on the relative caps.

1. Check that the reference notch on the phonic wheel is aligned with the pin on the front cover of the engine block.

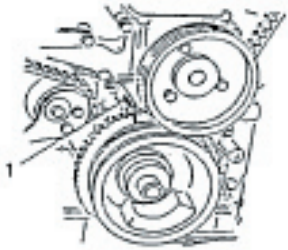

1. Slightly raise the arm of the belt tensioner and remove tool N° 1.820.053.000 (A.2.0363).

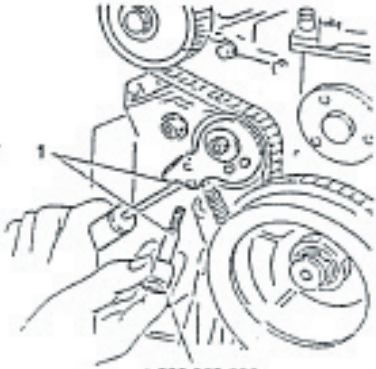

- Complete the refitting operations by reversing the procedures followed for removal.

Alfawiki.nl

AUXILIARY UNIT BELTS

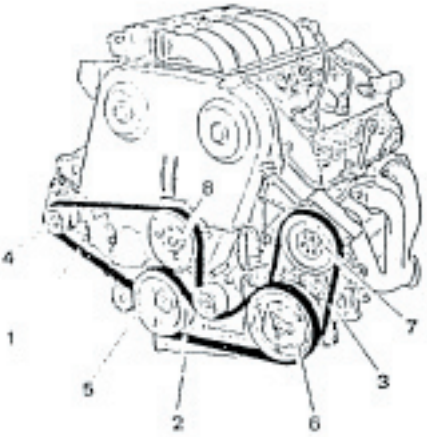

1. *Water pump-alternator drive belt*
2. *Air conditioning compressor drive belt*
3. *Power steering pump drive belt*
4. *Alternator*
5. *Engine pulley*
6. *Air conditioning compressor*
7. *Power steering pump*
8. *Water pump*

NOTE: When checking the tensioning of the belt, visually check its condition ensuring that it shows no signs of:
- cuts
- cracks
- superficial wearing of the material (which appears smooth and shiny)
- dry or hardened parts (loss of adherence).

If any of these conditions is found, replace the belt.

CAUTION:
If the belt comes into contact with oil or solvent the elasticity of the belt may be affected which will reduce its adherence.

WATER PUMP - ALTERNATOR DRIVE BELT

Checking and tensioning

1. Remove the front cover from the timing belt.

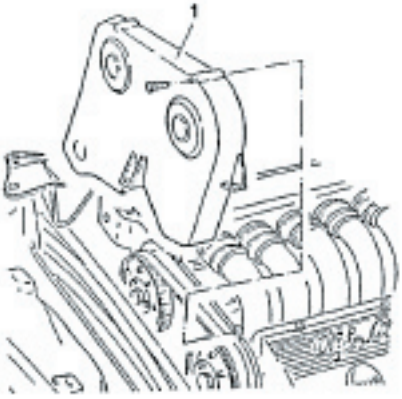

1. Working in the engine compartment, measure the tension on the belt using tool N° 1.824.018.000 (C.2.0131), as shown in the illustration.

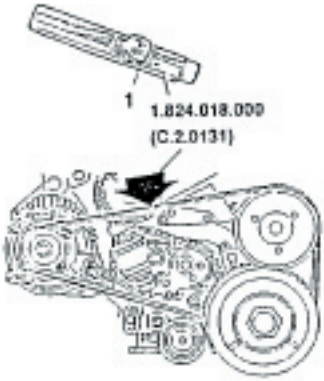

Alfawiki.nl

– Check that the tension values are within the specified limits.

Water pump - alternator control "POLY-VK5" belt tension	
During installation	400 - 450 N
Minimum	300 N
Re-tensioning	300 - 350 N

NOTE: The belt can be re-tensioned after a brief testing period, operating as follows:
- run the engine until it reaches normal operating temperature
- run the engine for about 10 minutes
- switch off the engine and wait until it cools
- re-tighten the belt to the correct value.

– If the belt is not correctly tightened, proceed as follows:
– Place the vehicle on a lift.
1. Remove the front right-hand wheel.

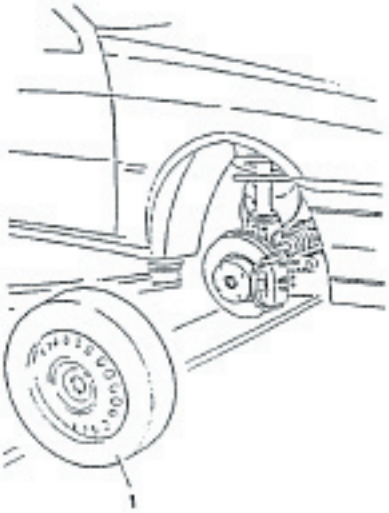

1. Remove the the central engine protection moulding through the right-hand wheelhousing.

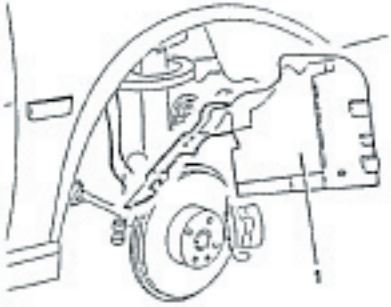

– Raise the vehicle.
1. Loosen the two screws securing the belt tensioner.
2. Adjust the micrometric tensioning screw until the specified belt tension is obtained.
– Tighten the two screws securing the belt tensioner.

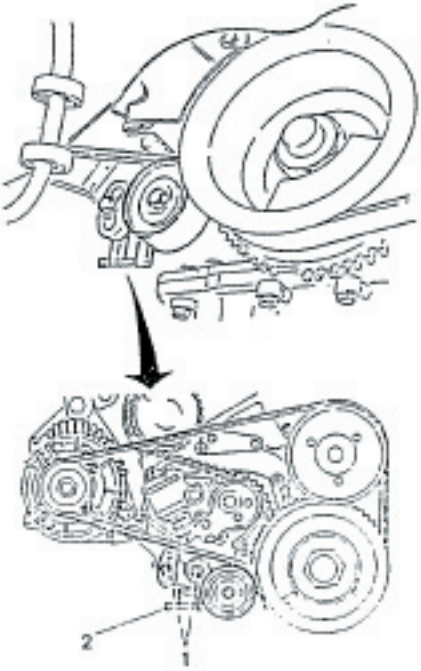

Alfawiki.nl

Substitution

- Place the vehicle on a lift.
- Remove the air conditioning compressor drive belt (see specific procedure).

1. Loosen the two screws securing belt tensioner.
2. Adjust the micrometric tensioning screw in order to reduce belt tension.
3. Remove the water pump - alternator drive belt.

- Fit a new belt by reversing the procedure followed for removal.

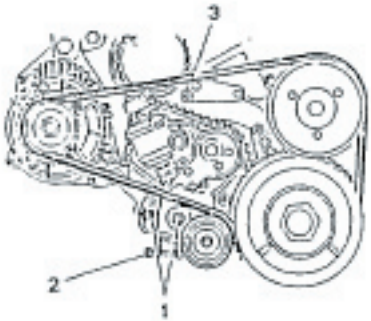

AIR CONDITIONING COMPRESSOR DRIVE BELT

Checking and tensioning

- Place the vehicle on a lift.

1. Remove the front right-hand wheel.

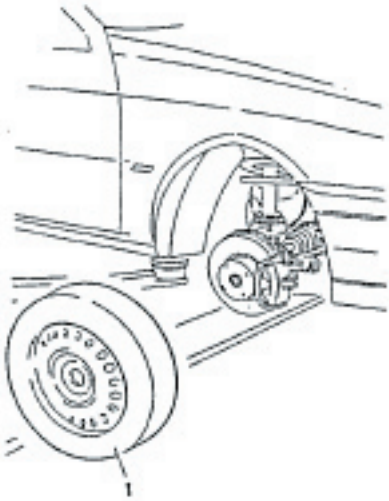

1. Remove the central engine protection moulding through the right-hand wheel housing.

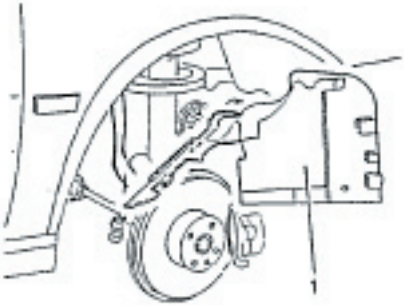

Alfawiki.nl

- Raise the vehicle.

1. Working underneath the vehicle, insert tool N° 1.824.018.000 (C.2.0131), as shown in the illustration.

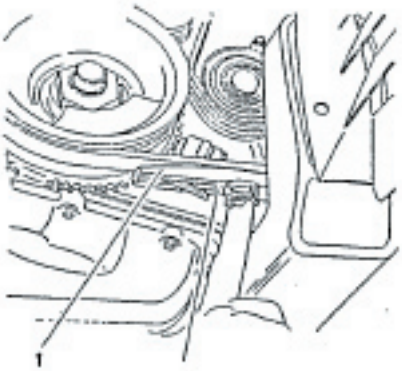

1.824.018.000
(C.2.0131)

- Check that the tension values measured with the specific tool, are within the prescribed limits.

Air conditioning compressor "POLY-VK6" drive belt tension	
During installation	550 - 600 N
Minimum	450 N
Re-tensioning	450 - 500 N

NOTE: The belt can be re-tensioned after a brief testing period, operating as follows:
- run the engine until it reaches normal operating temperature
- run the engine for about 10 minutes
- switch off the engine and wait until it cools
- re-tighten the belt to the correct value.

- If the belt is not correctly tightened, proceed as follows:

1. Remove the front right-hand wheelhousing.

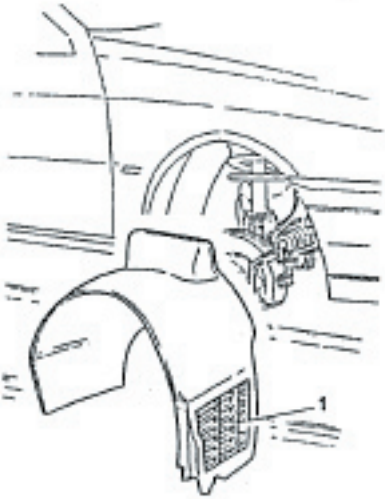

1. Loosen the two screws securing the belt tensioner.
2. Move the belt tensioner downwards to increase the tension on the belt.

- Tighten one of the screws securing the tensioner and check the tension on the belt.
- If the tension is correct, tighten the other screw securing the tensioner.

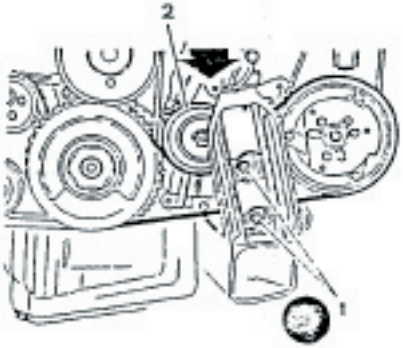

Alfawiki.nl

Substitution

- Place the vehicle on a lift.
- Remove the front right-hand wheel.
- Remove the central engine protection moulding from the right- hand wheel housing.
- Raise the vehicle.

1. Loosen the two screws securing the belt tensioner.
2. Remove the air conditioning compressor drive belt.

- Fit a new belt by reversing the procedure followed for removal.

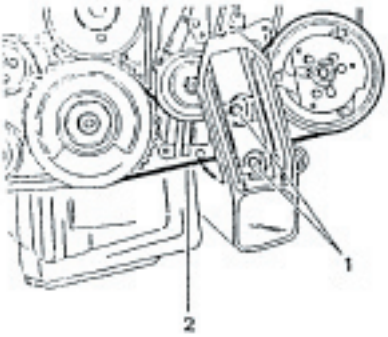

POWER STEERING PUMP DRIVE BELT

Checking and tensioning

- Place the vehicle on a lift and raise it.

1. Working from under the vehicle, insert tool N° 1.824.018.000 (C.2.0131), as shown in the illustration.

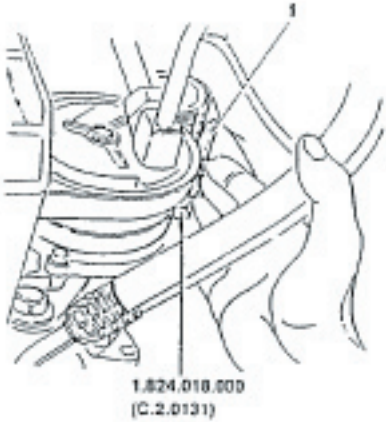

- Check that the tension values measured with the specific tool are within the specified limits.

Power steering pump "POLY-VK4" drive belt tension	
During installation	350 - 400 N
Minimum	250 N
Re-tensioning	250- 300 N

NOTE: The belt can be re-tensioned after a brief testing period, operating as follows:
- run the engine until it reaches normal operating temperature
- run the engine for about 10 minutes
- switch off the engine and wait until it cools
- re-tighten the belt to the correct value.

Alfawiki.nl

- If the belt is not correctly tightened, proceed as follows:
1. Working in the engine compartment loosen the screws securing the power steering pump support bracket.
2. Adjust the micrometric tensioning screw until the correct belt tension is obtained.
- Tighten the screws securing the power steering support bracket.

Substitution

1. Place the vehicle on a lift.

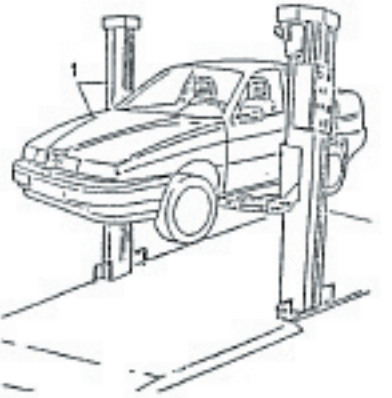

- Remove the air conditioning compressor drive belt (see specific procedure).
- Lower the vehicle.
1. Working in the engine compartment loosen the screws securing the power steering pump support bracket.
2. Adjust the micrometric tensioning screw to reduce the belt tension.
3. Remove the power steering pump drive belt.
- Fit a new belt by reversing the procedure followed for removal.

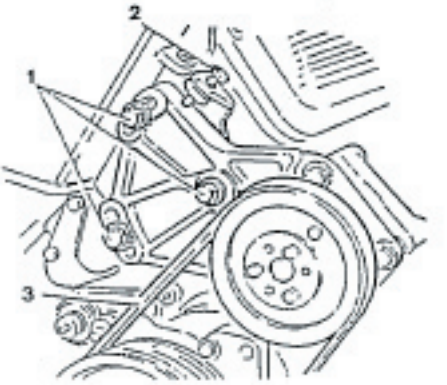

Alfawiki.nl

CHECKING PRESSURE AND SEALING OF FUEL CIRCUIT

1. Disconnect the fuel delivery hose from the supply manifold.
2. Connect a pressure meter and a "T" union to the ends of the previously disconnected inlet hose.
3. Disconnect the pressure regulator vacuum intake hose from the air intake box in order to prevent variations in engine r.p.m. from influencing the readings.

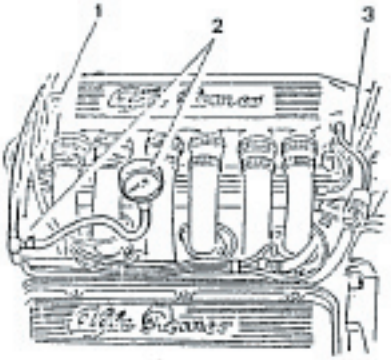

– Start the engine and run at idle speed and check that the pressure of the fuel is within the specified limits.

Fuel pressure at idle speed
2.8 - 3.2 bars (2.9 - 3.3 kg/cm²)

– Re-connect the vacuum intake hose to the air intake box. At idle speed the pressure must decrease by 0.5 bars and then increase when the throttle valve opens. If this does not happen, check for leaks in the vacuum intake hose of the fuel pressure regulator.

NOTE: **When fuel is visibly leaking or there is a persistant smell of petrol, test the sealing of the fuel supply circuit.**

CAUTION:
Keep a fire extinguisher to hand in case fuel is leaking.
Do not smoke.

1. **With the pressure meter connected to the engine when running at idle speed, squeeze the hose just after the pressure regulator and check that the pressure increases to approximately 4 bars.**
   Do not let the pressure exceed this value.

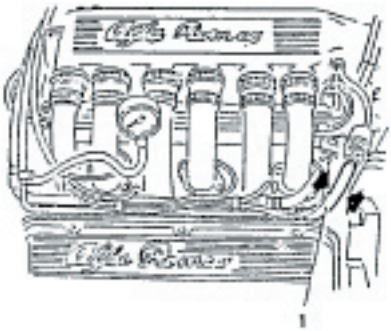

Alfawiki.nl

CHECKING SEALING OF FUEL VAPOUR RECOVERY SYSTEM

DUE FOR PUBLICATION

REPLACING AIR CLEANER CARTRIDGE

1. Loosen the screws securing the air cleaner cover.
2. Loosen the screw securing the air-flow meter support bracket.
3. Disconnect the corrugated sleeve from the air-flow meter after loosening the relative clamp.

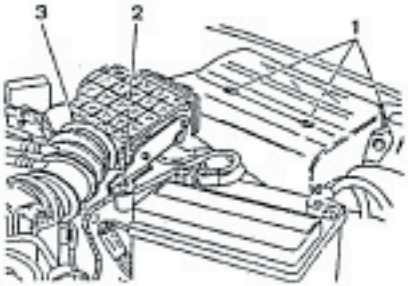

1. Lift the air-flow meter - filter cover assembly without disconnecting the air-flow meter from its electrical connection.
2. Remove the filter element.

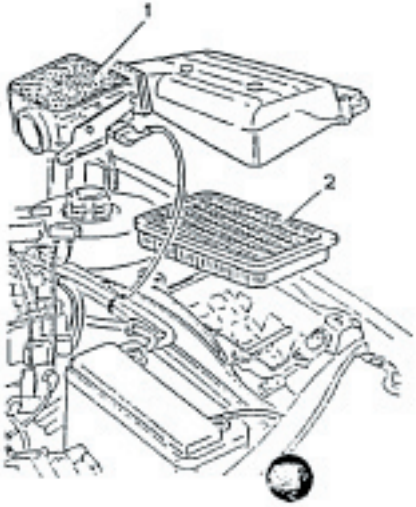

Alfawiki.nl

CAUTION:
Any attempt to clean the air cleaner filter may result in damage to the filter and compromise the correct functioning of the engine supply system.

- Carefully clean the container holding the filter element.
- Position a new filter element.
- Refit the filter cover - air-flow meter assembly by reversing the procedure followed for removal.

NOTE: If the filter shows signs of oil contamination, check the entire circuit for possible infiltrations.

CHECKING SEALING OF THE AIR CIRCUIT

- Start the engine and run at idle speed.
- Using a brush, paint the junctions of the ducts downstream of the air-flow meter with soap solution.

Check that the solution is not sucked into the ducts and that the r.p.m. remains the same.

REPLACING THE FUEL FILTER

- Place the vehicle on a lift.
- Start the engine and disconnect the relay from the fuel pump (see GROUP 49) and wait until the engine cuts out through lack of fuel.

1. Raise the vehicle, and remove the fuel filter cover.

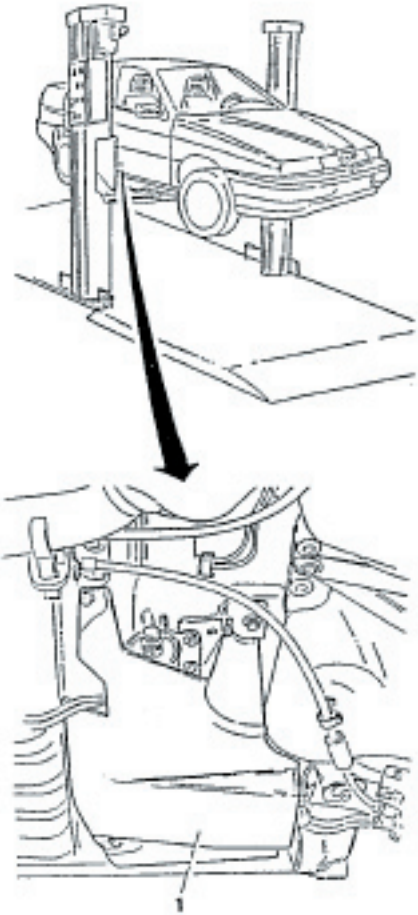

1. Unscrew the inlet and outlet connections carrying fuel to and from the filter.
- Collect the fuel in a suitable container and plug the ends of the connections without bending or twisting the pipes.
2. Remove the fuel filter together with the supporting clamp.

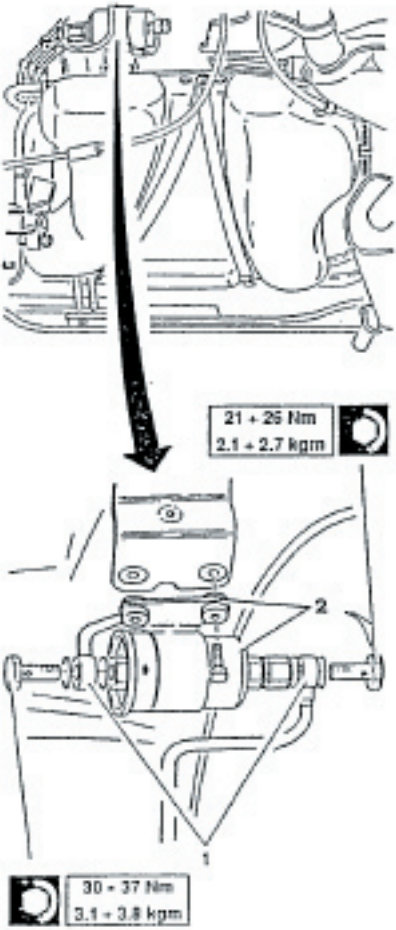

1. Separate the fuel filter from the clamp on a bench.

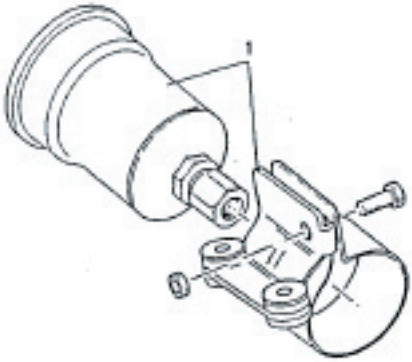

- Fit a new filter by reversing the procedure followed for removal and following the indications given below:
  - replace the copper gaskets on the connections;
  - fit the filter so that the arrow stamped onto it points in the direction in which the fuel will flow.

CHECKING EXHAUST EMISSIONS

CAUTION:
This operation should be carried out in the open or in a suitable location which fulfills the requirements of the current local regulations.

NOTE: **The control must be carried out at with the engine idle speed and at operating temperature (after the electric fan has cut-in and then cut-off again).**
If the idle speed in not within the specified values, check the operation of the constant idle speed actuator.

Alfawiki.nl

- Check that the engine oil level is correct and that the air cleaner filter cartridge is clean.
- Start the engine and run it at idle speed.

1. Introduce the probe of the analyzer into the end of the exhaust pipe and check that the CO and HC percentages are within the specified limits.

Idle speed	750 ± 50 r.p.m.
% of exhaust CO (volume)	≤ 0.5
Exhaust HC p.p.m.	≤ 50

If, after checking, the values are not found to be within the specified limits, consult the fault diagnosis located at the end of GROUP 04 - ENGINE MANUAL and refer to the diagnosis procedures employing the specific tool described in the "ELECTRICAL - ELECTRONIC DIAGNOSIS" MANUAL.

NOTE: THE CO PERCENTAGE CANNOT BE ADJUSTED!
If the values are not within the specified limits it is necessary to act on the the faulty components.

CHECKING THE LAMBDA PROBE

see "ELECTRICAL - ELECTRONIC DIAGNOSIS" MANUAL.

CHECKING AND REPLACING THE SPARK PLUGS

The spark plugs are installed in series and are of the surface discharge type with four peripheral points and once central electrode.
The distance between electrodes on this type of spark plug does not need to be adjusted.

Firing order	1 - 4 - 2 - 5 - 3 - 6

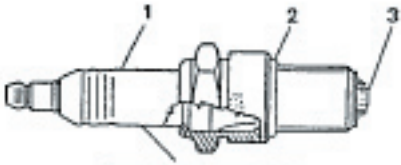

GOLDEN LODGE 2HL

1. *Ceramic*
2. *Gasket*
3. *Electrode*

CAUTION:
Do not use spark plugs of a type or size different from those specified as this may cause damage to the engine and alter the level of toxic exhaust fumes.

Alfawiki.nl

MAINTENANCE

Periodically check to see if the electrode is dirty.

Also check to see if it is worn or the ceramic insulation broken.

Replace the spark plugs if any of these faults are detected.

When refitting, lubricate the threads using the prescribed oil and tighten to the specified torque.

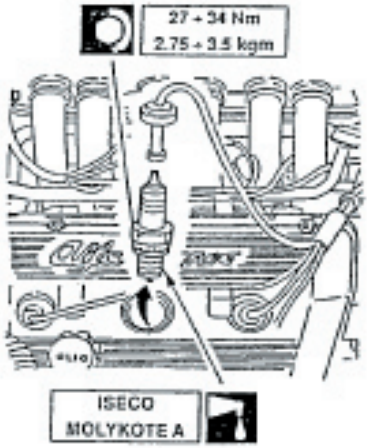

CAUTION:

A dirty or burnt out spark plug is often symptomatic of a malfunction in the engine's supply system.

For example:

- Traces of carbon powder: incorrect mixture, air cleaner very dirty;
- Oil stains: infiltrations of oil from the piston rings;
- Ash formation: presence of aluminium material especially in oil;
- Melted electrodes: overheating due to unsuitable co[illegible]ssion, valve defects;
- Fast-wearing electrodes: damaging additives present in the fuel or oil, pinging, overheating.

For greater detail regarding these problems, refer to the fault diagnosis contained in GROUPS 01 and 04.

TESTING THE SEAL ON THE ENGINE COOLING SYSTEM PRESSURIZED CAP

– Use a seal test instrument.

1. Screw the connection onto the lower end of the seal test instrument.
2. Fit the pressurized cap of the expansion tank onto the connection.
3. Pressurize the piston manually and check that the release valve opens at the correct pressure which can be read off the instrument.

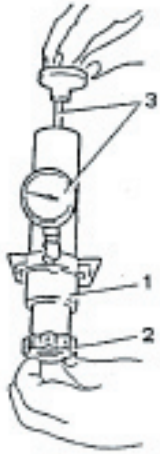

Pressure setting of the pressurized cap
0.09 ÷ 0.1 bars (1 ÷ [illegible]/cm²)

Alfawiki.nl

CHECKING THE SEALING OF THE ENGINE COOLING SYSTEM

- Unscrew and remove the pressurized cap from the expansion tank.

1. Screw the connection of the test instrument onto the neck of the expansion tank.
2. Pressurize the system manually and check that the pressure is maintained at the prescribed level. If the pressure varies, check that there are no leaks in the sleeves or radiator.

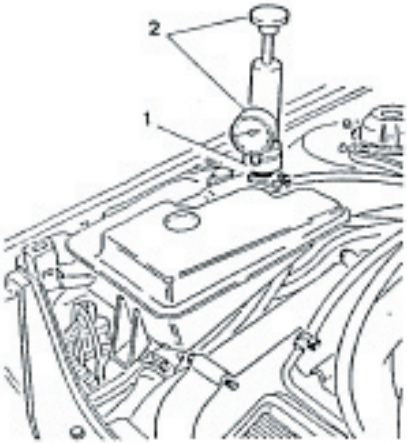

Hydraulic system control pressure
1.08 bars (1.1 kg/cm²)

CAUTION:
For safety reasons, the pressure during these checks with the test instrument should not exceed 1.38 bars (1.4 kg/cm²).

REPLACING ENGINE COOLANT FLUID

1. Unscrew and remove the cap from the expansion tank.

CAUTION:
Never remove the cap from the expansion tank when the engine is warm!

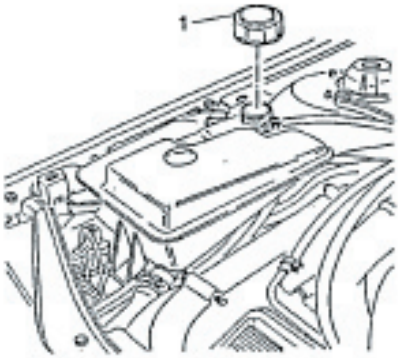

Alfawiki.nl

1. Loosen the clamps securing the sleeve carrying the engine coolant to the pump (from the radiator) and disconnect the sleeve. Drain off the engine coolant into a suitable container placed under the vehicle.

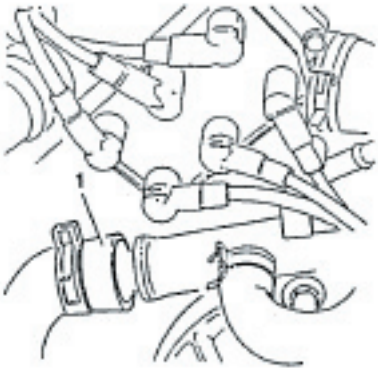

- Re-connect the radiator sleeve and any previously disconnected hoses and check that all the clamps are tight.
- Refill the system up to the MAX mark on the expansion tank.
  Indications regarding the quality and quantity of the engine coolant fluid to be used for refilling, are given in the table below.

Minimum temperature		-40C
Antifreeze concentrated	Alfa Romeo Antifreeze	5.0 litres (55%)
Distilled water		4.2 litres (45%)
Ready-for-use antifreeze	Alfa Romeo Climafluid Permanent - 40°C	9.2 litres

- Start the engine and run at normal operating temperature until the opening of the thermostat frees the residual air from the circuit.
- When the engine is cold, top-up to the MAX mark on the expansion tank.
- Screw the pressurized cap back onto the expansion tank and tighten it.

CAUTION:
It is unadvisable to mix different types of antifreeze.
Do not use rust-proofing additives as they may not be compatible with the antifreeze.

Alfawiki.nl

MAINTENANCE OF MECHANICAL UNITS

CHECKING FOR DAMAGE OF THE HALFSHAFT, POWER STEERING BELLOWS AND STEERING KNUCKLES

DRIVE SHAFTS

1. Check that the rubber boots are not damaged and that grease is not seeping from them.
   Overhaul the entire joint if any breakage is discovered as foreign matter may have penetrated which would result in serious malfunctions.
2. Visually check the constant speed joints.

– If it becomes necessary to overhaul components, refer to REPAIR INSTRUCTIONS - MECHANICAL UNITS - GROUP 17.

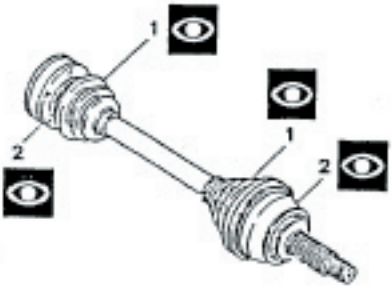

STEERING RODS

1. Ensure that the protective boots are not damaged and if cracks or nicks are discovered, replace the boots.
2. Check that the knuckle joints are not damaged or worn.

– If necessary replace the components, see: REPAIR INSTRUCTIONS - MECHANICAL UNITS - GROUP 23.

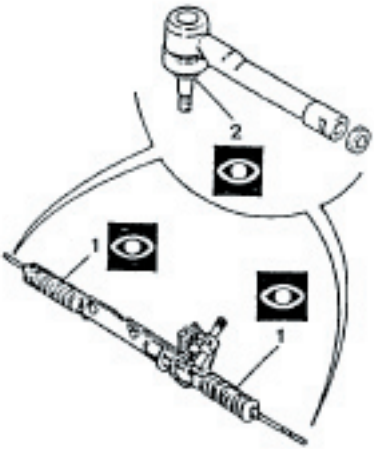

Alfawiki.nl

BRAKING CIRCUIT SEALING TEST

1. Check pipes and hoses: they must not be damaged or show signs of swelling or corrosion. Also check that they are correctly installed.
2. Check the connections: there must be no leaks. If necessary tighten to the correct torque.
3. Check that the servo brake vacuum intake hose is correctly installed and not cracked or pinched.

– Replace any damaged parts and bleed the system. (see: REPAIR INSTRUCTIONS - MECHANICAL UNITS - GROUP 22).

WARNING:
Clutch/brake fluid will damage paintwork and should be handled with care.

NOTE: **The brake system must be bled if any part is disassembled or replaced (see GROUP 22).**

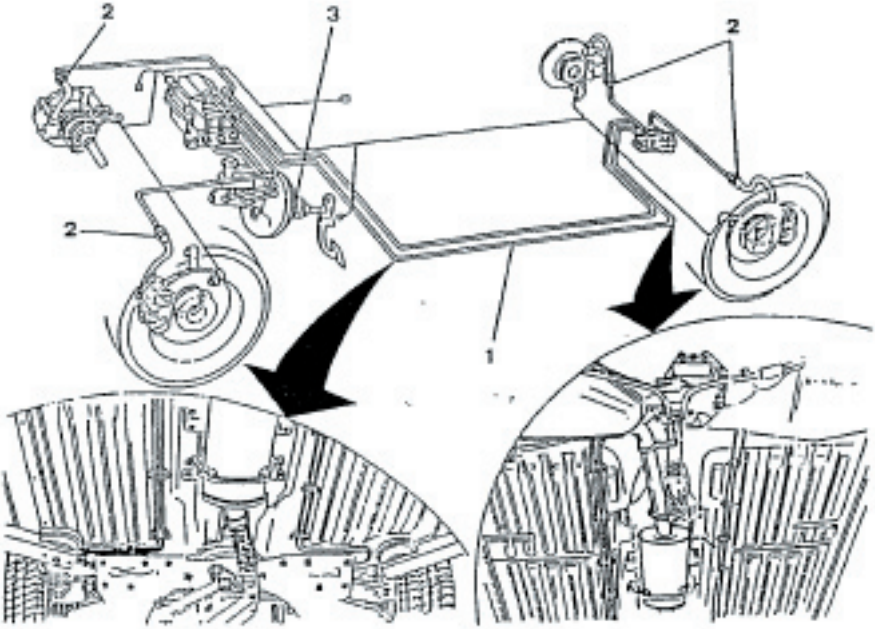

Alfawiki.nl

CHECKING THE LEVEL OF THE CLUTCH/BRAKE FLUID

WARNING:
Ensure that the fluid does not come into contact with the paintwork.

NOTE: When checking the level of the clutch/brake fluid the vehicle must be resting on a level surface.

1. Remove the cap from the brake clutch fluid reservoir
2. Ensure that the fluid reaches the MAX mark.
3. If necessary fill the reservoir with the prescribed fluid

- If the level is very low, carefully check the system for leaks

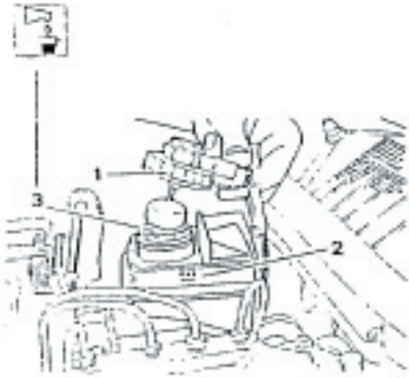

WARNING:
The clutch/brake fluid is hygroscopic and quickly absorbs water when in contact with humid environments.
Top-up with fluid contained in sealed cans which should not be opened until they are to be used.

NOTE: The brake system must be bled if any part is disassembled or replaced (see: REPAIR INSTRUCTIONS - MECHANICAL UNITS - GROUP 22).

CHECKING HANDBRAKE TRAVEL

1. Pull on the handbrake to the third detent on the sector gear and check that the wheels are locked.
2. If they are not blocked tighten the regulation nut until they are.

- Applying a force of approximately 40 Kg to the control lever, check that the number of detents does not exceed 7.
- Ensure that when the handbrake is disengaged the wheels rotate freely.

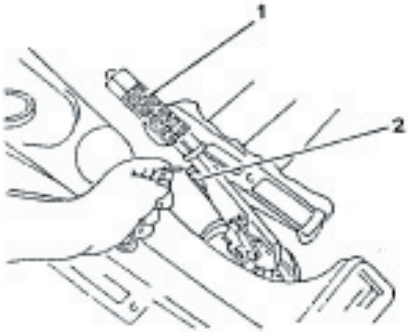

Alfawiki.nl

CHECKING POWER STEERING FLUID

NOTE: This check should be carried out when the vehicle is on level ground.

1. Remove the breather hose and cap.
2. Check that the level reaches the MAX mark.

- If it does not, top-up with the specified oil.
- Start the engine and wait until it is running smoothly and rotate the steering wheel a number of times as far as possible to the right and to the left.
- Top-up the system to the MAX mark and close the cap.

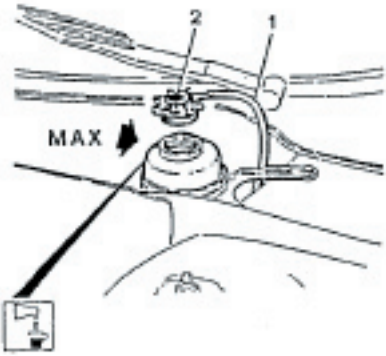

CHECKING AND REPLACING GEARBOX - DIFFERENTIAL OIL

For T. SPARK engines
(AR 67103 - AR 67102 - AR 67202)

NOTE: **The level should be checked when the vehicle is on level ground and on a vehicle lift.**

1. Remove the drainage cap, filler cap and reversing light switch and leave the oil to drain off completely (wait for at least 15 minutes).

- Clean the drainage cap, screw it back on and refill the system through the filler neck with the prescribed oil up to the lower edge of the reversing light switch hole. Tighten the caps to the prescribed torque and connect the electrical connector of the reversing light switch.

2. If it is necessary to check the level of the oil, unscrew the reversing light switch and check that the oil reaches the lower edge of the relative hole.

- If necessary, top-up the system with the specified oil through the filler hole, clean the cap, tighten it to the specified torque and reconnect the electrical connector of the reversing light switch.

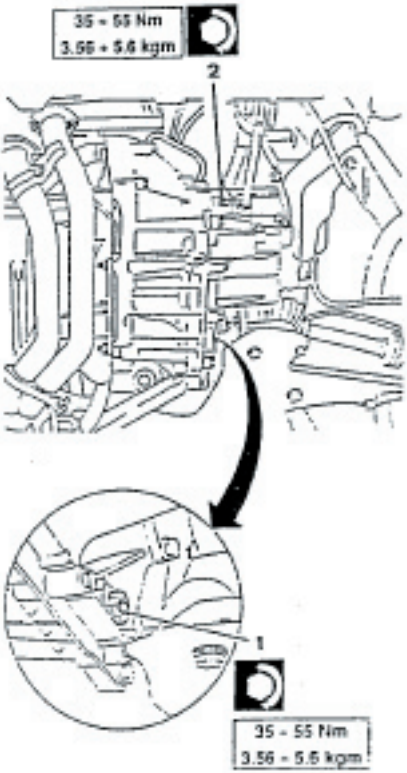

Alfawiki.nl

CHECKING AND REPLACING GEARBOX - DIFFERENTIAL OIL

For V6 engines (AR 67301)

NOTE: **The level should be checked with the vehicle on a level surface and on a vehicle lift.**

- Operate when the engine is cold.
1. Remove the dipstick and check that the oil level corresponds to the maximum mark on the dipstick itself.

WARNING:
Clean the dipstick with a lint-free cloth as fabric hair and threads could damage the gearbox.

2. If necessary top-up with the prescribed oil.
3. If necessary replace the oil, remove the magnetic cap on the gearbox and leave the oil to drain for at least 15 minutes.
- Screw the caps back on and refill the system with the prescribed oil up to the maximum mark.

NOTE: **Clean the caps before replacing them.**

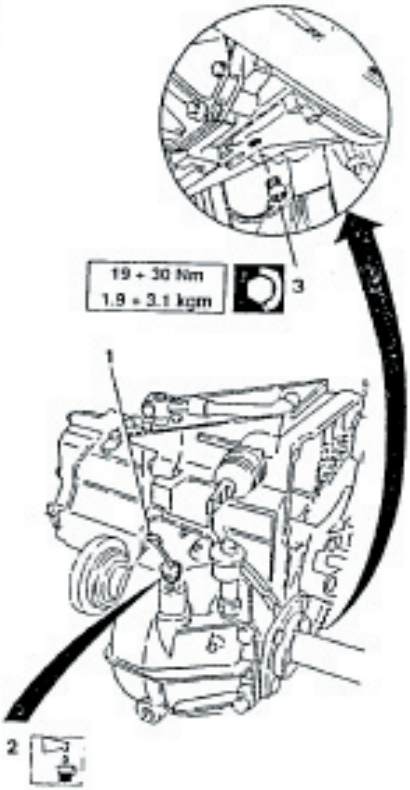

LUBRICATING THE DOOR, BONNET AND BOOT HINGES; GREASING THE BONNET CATCHES

Apply a suitable amount of grease to the parts indicated below in order to prevent wear and corrosion:
- clean the parts affected
- grease
- remove excess grease.

DOORS

1. Lubricate the hinges, check strap and door locking device.

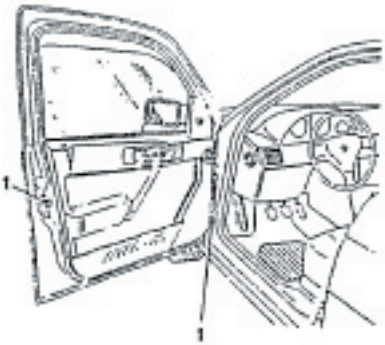

BONNET

1. Lubricate the catch and the bonnet release cable

BOOT

1. Lubricate the catch.

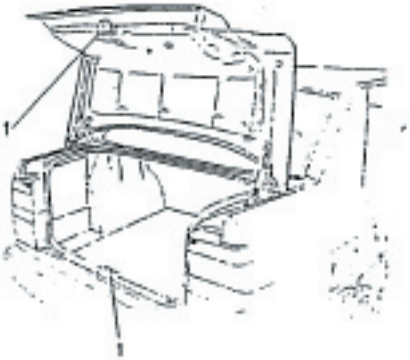

Alfawiki.nl

TECHNICAL CHARACTERISTICS AND SPECIFICATIONS

BELT TENSION

For T. SPARK (AR 67103 - AR 67102 - AR 67202) engines

Tension \ Belt	Power steering pump Water pump	Alternator Air conditioning compressor
On installation	350 ÷ 400 N	400 ÷ 450 N
Minimum	250 N	300 N
Re-tensioning	250 ÷ 300 N	300 ÷ 350 N

For V6 (AR 67301) engine

Tension \ Belt	Alternator Water pump	Air conditioning compressor	Power steering pump
On installation	400 ÷ 450 N	550 ÷ 600 N	350 ÷ 400 N
Minimum	300 N	450 N	250 N
Re-tensioning	300 ÷ 350 N	450 ÷ 500 N	250 ÷ 300 N

VALVE CLEARANCE

NOTE: only adjust valve clearance when the engine is cold

Valve clearance \ Engine	T. SPARK engines (AR 67103 - AR 67102 - AR 67202)	V6 engine (AR 67301)
Intake	0.380 ÷ 0.450 mm	0.475 ÷ 0.500 mm
Exhaust	0.430 ÷ 0.500 mm	0.310 ÷ 0.345 mm

Alfawiki.nl

FUEL DELIVERY PRESSURE

Fuel pressure at idle speed	2.8 ÷ 3.2 bars (2.9 ÷ 3.3 kg/cm^2)
Maximum pressure (with pressure regulator engaged)	4 bars (4.1 kg/cm^2)

IDLE SPEED AND EXHAUST EMISSIONS CHECK

Idle speed	750 ± 50 r.p.m.
% of CO in volume at exhaust, at idle speed	≤ 0.5
Exhaust HC at idle speed p.p.m.	≤ 50

SPARK PLUGS

	T. SPARK	V6
Type	GOLDEN LODGE 25HLD CHAMPION C6YCC	GOLDEN LODGE 2HL

COOLING SYSTEM

Hydraulic system test pressure	1.08 bars (1.1 kg/cm^2)
Pressurized cap pressure setting	0.98 ± 0.1 bars (1 ± 0.1 kg/cm^2)

Alfawiki.nl

PARKING BRAKE

CONTROL LEVER

Number of clicks of the control lever before locking the rear wheels: 3

FILLING FLUIDS AND LUBRICANTS

See "FLUIDS AND LUBRICANTS" PAGE 00-16 and "APPROXIMATE SERVICING CAPACITIES" page 00-19.

Alfawiki.nl

TIGHTENING TORQUES

T. SPARK ENGINES (AR 67103 - AR 67102 - AR67202)

Part		N.m	kg.m
Oil sump drain plug		64.5 ÷ 80	6.6 ÷ 8.2
Cylinder head nuts 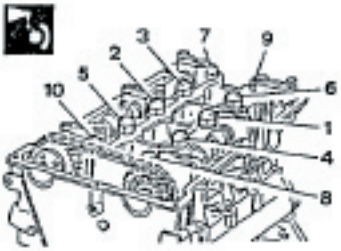	When refitting: Tighten gradually in the sequence shown	76 ÷ 84	7.75 ÷ 8.56
	After running in and testing on the bench: With the engine cold, slacken the nuts one turn in the sequence shown, moisten with engine oil and tighten still following the sequence shown	82.65 ÷ 91.35	8.43 ÷ 9.3
Fuel outlet fitting from filter		21 ÷ 26	2.1 ÷ 2.7
Fuel inlet fitting in filter		30 ÷ 37	3.1 ÷ 3.8
Spark plugs		28 ÷ 34.6	2.85 ÷ 3.5

Alfawiki.nl

TIGHTENING TORQUES (continued)

V6 (AR 67301) engine

Part		N.m	kg.m
Oil sump drainage cap		64 ÷ 79	6.5 ÷ 8
Cylinder head nuts 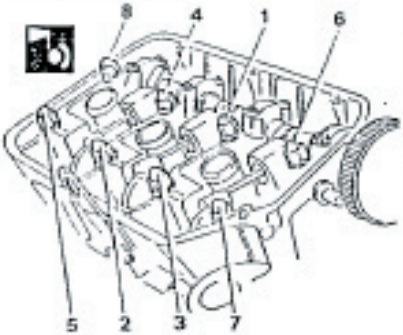	**During installation:** gradually tighten following the sequence indicated	88.5 ÷ 97.8	9 ÷ 10
	After bench testing: When the engine is cold, loosen the nuts by one turn following the sequence indicated. Lubricate with oil and tighten following the sequence indicated	97.8 ÷ 108.2	10 ÷ 11
Nuts securing camshaft caps (oiled)		16 ÷ 18	1.63 ÷ 1.84
Screws securing timing pulley to front hub		13 ÷ 15.69	1.32 ÷ 1.6
Nut securing camshaft front hub		97 ÷ 117.12	10 ÷ 12
Nut-screw for adjusting rocker-arm play		14.8 ÷ 17.7	15 ÷ 18
Fuel filter outlet connection		21 ÷ 26	2.1 ÷ 2.7
Fuel filter inlet connection		30 ÷ 37	3.1 ÷ 3.8
Spark plugs		27 ÷ 34	2.75 ÷ 3.5

Alfawiki.nl

TIGHTENING TORQUES (continued)

GEARBOX AND DIFFERENTIAL

Part	N.m	kg.m
Threaded cap for introducing gearbox oil (only 1.8/2.0 T.S.)	35 ÷ 55	3.56 ÷ 5.6
Magnetic cap in gearbox for oil drainage (only 1.8/2.0 T.S.)	35 ÷ 55	3.56 ÷ 5.6
Magnetic cap in gearbox for oil drainage' (only 2.4 V6)	19 ÷ 30	1.94 ÷ 3.06

BRAKE SYSTEM

Part	N.m	kg.m
Connection for pipe on brake pump	15.3 ÷ 18.9	1.55 ÷ 1.93
Screw for bleeding on brake calipers	3.71 ÷ 5.9	0.38 ÷ 0.61
Connection for hoses on brake calipers	15.3 ÷ 18.9	1.55 ÷ 1.93
Connection for pipes on braking corrector	9.35 ÷ 11.55	0.95 ÷ 1.18

SPECIFIC TOOLS

1.820.051.000 (A.2.0361)	Tool for rotating camshaft pulley and auxiliary unit control
1.820.053.000 (A.2.0363)	Hydraulic belt tensioner locking pin
1.820.116.000 (A.4.0199)	Tool for checking position of reference notches on camshaft central caps
1.820.123.000 (A.4.0221)	Plate for checking position of reference notches on camshaft central caps
1.820.150.000 (R.9.0001)	Container for caps for adjusting valve clearance
1.820.232.000	Tool for disengaging timing pulley from relative shaft for replacing intake valve clearance adjustment caps
1.822.016.000 (A.5.0220)	3 mm and 11 mm spanner for adjusting exhaust-side tappets
1.824.018.000 (C.2.0131)	Tool for checking belt tension
1.825.013.000 (C.6.0183)	Tool for checking T.D.C.
1.825.018.000 (C.6.0197)	Feeler gauge for checking valve clearance
1.827.002.000 (C.1.0108)	Dial guage for checking valve clearance

Alfawiki.nl

155 4

REPAIR MANUAL

VEHICLE CHARACTERISTICS AND MAINTENANCE

Alfa Romeo

PA1555A04x4000

Alfawiki.nl

12-1991

UPDATE CARD

155 TI

REPAIR MANUAL

- VEHICLE CHARACTERISTICS AND MAINTENANCE

UPDATE CARD			
UPDATE (DATE)	SECTION	PAGE	
		SUBSTITUTED	ADDED
	Vehicle characteristics and Maintenance (pages with PA455A24x4001)		
1 (12/1994)		00-1	
1 (12/1994)		00-2	
1 (12/1994)			00-B/1
1 (12/1994)			00-B/2
1 (12/1994)			00-B/3
1 (12/1994)		00-11 to 00-15	
1 (12/1994)		00-18	
1 (12/1994)		00-71	

Insert this Update Card in the volume " 155 - Repair Manual - Vehicle Characteristics and Maintenance" at the beginning of the section referring to 155 23.

Alfawiki.nl

GROUP 00

VEHICLE CHARACTERISTICS AND MAINTENANCE

INDEX

DIMENSIONS . . . . . 00 - 3
WEIGHTS AND LOADS . . . . . 00 - 4
WHEELS AND TYRES . . . . . 00 - 5
IDENTIFYING THE MODEL . . . . . 00 - 6
– Identification labels . . . . . 00 - 6
– Identification table . . . . . 00 - 7
– Overall identification label . . . . . 00 - 8
– Body paint identification label . . . . . 00 - 8
DIMENSIONS ('95 Versions) 00-8/1
WEIGHTS AND LOADS ('95 Versions) 00-8/2
WHEELS AND TYRES ('95 Versions) 00-8/2
MODEL IDENTIFICATION ('95 Versions) 00-8/3
– Model identification 00-8/3
– Identification label 00-8/3
SPECIFIC TOOLS . . . . . 00 - 9
LIFTING AND TOWING POINTS . . . . . 00 - 9
SERVICING OPERATIONS 00-11
– Programmed checks and maintenance 00-14
FLUIDS AND LUBRICANTS 00-15
APPROXIMATE SERVICING CAPACITIES 00-18
SPECIFIED FUEL 00-18
ENGINE MAINTENANCE OPERATIONS 00-19
– Replacing engine oil and filter 00-19
– Checking and adjusting valve clearance 00-20
– Replacing timing belt 00-23
– Auxiliary unit belts 00-36
  - Water pump alternator drive belt 00-37
  - Air conditioning compressor drive belt 00-39
  - Power steering pump drive belt 00-43
– Checking pressure and sealing of fuel circuit 00-48
– Checking sealing of the fuel vapour recovery system (due for publication) 00-50
– Replacing air cleaner cartridge 00-50
– Checking sealing of air supply system and over-boost valve control circuit (due for publication) 00-51
– Checking sealing of blow-by system (due for publication) 00-51
– Replacing fuel filter 00-52
– Checking and regulation of idle speed 00-53
– Checking operation of the lambda probe 00-53
– Checking exhaust emissions 00-54

Alfawiki.nl

- Checking ignition advance 00-56
- Checking and replacing spark plugs 00-57
  - Maintenance 00-57
- Checking the seal on the engine cooling system pressurized cap 00-58
- Checking the sealing of the engine cooling system 00-58
- Checking level and replacing engine coolant 00-59

MAINTENANCE OF MECHANICAL UNITS 00-61
- Checking for damage of the half-shafts, power steering bellows, steering knuckle covers and drive shaft 00-61
  - Drive half-shafts 00-61
  - Steering rod 00-61
  - Drive shaft 00-62
- Checking sealing of braking system 00-63
- Checking level of clutch/brake fluid 00-64
- Checking handbrake travel 00-64
- Checking power steering fluid 00-65
- Checking level and replacing gearbox and front differentials oil 00-65
- Checking and replacing rear differential oil 00-67
- Lubricating the door, bonnet and boot hinges and bonnest/boots catches devices 00-68
  - Doors 00-68
  - Bonnet 00-68
  - Boot 00-68

TECHNICAL CHARACTERISTICS AND SPECIFICATIONS 00-69
- Belt tensioning 00-69
- Valve clearance 00-69
- Checking fuel supply pressure 00-69
- Checking idle speed 00-70
- Checking exhaust emissions 00-70
- Ignition 00-70
- Cooling system 00-70
- Handbrake 00-70
- Filling with fluids and lubricants 00-71
- Tightening torques 00-72

SPECIFIC TOOLS 00-73

Alfawiki.nl

DIMENSIONS

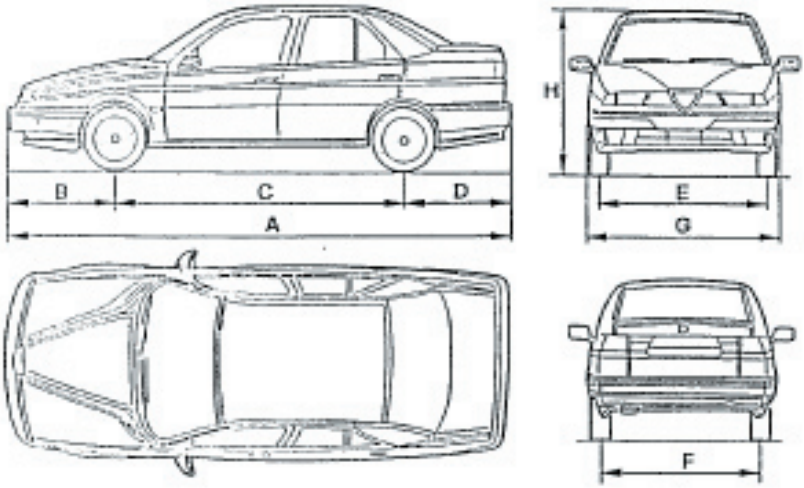

Dimensions			Version 155 ⊠
A	Maximum length	mm	4443
B	Front projection	mm	960
C	Wheel base	mm	2540
D	Rear projection	mm	943
E	Front wheel track	mm	1477
F	Rear wheel track	mm	1402
G	Maximum width	mm	1700
H	Maximum height	mm	1440

Alfawiki.nl

WEIGHTS AND LOADS

Weights and loads \ Version			155 Q4
Kerb weight (DIN)		kg	1390
Vehicle weight when fully loaded		kg	1845
Useful load		kg	455
Maximum permitted weight per axle	front	kg	1030
	rear	kg	980
Towable weight	with trailer with brakes	kg	1500
	with trailer without brakes	kg	450
Maximum loading on tow hook		kg	105

Alfawiki.nl

WHEELS AND TYRES

Characteristics / Version		155 Q4
Rim size		6J x 15"
Tyre dimensions	standard	205/50 ZR 15"
	optional	-
Tyre pressure bar - kg/cm²	average load, normal speed	front 2.5 rear 2.0
	full load, high speed	front 2.8 rear 2.6
Compact spare wheel	rim size	4J x 15"
	tyre dimensions	115/70 R 15"
	tyre pressure bar - kg/cm²	4.2

Alfawiki.nl

IDENTIFYING THE MODEL

IDENTIFICATION LABELS

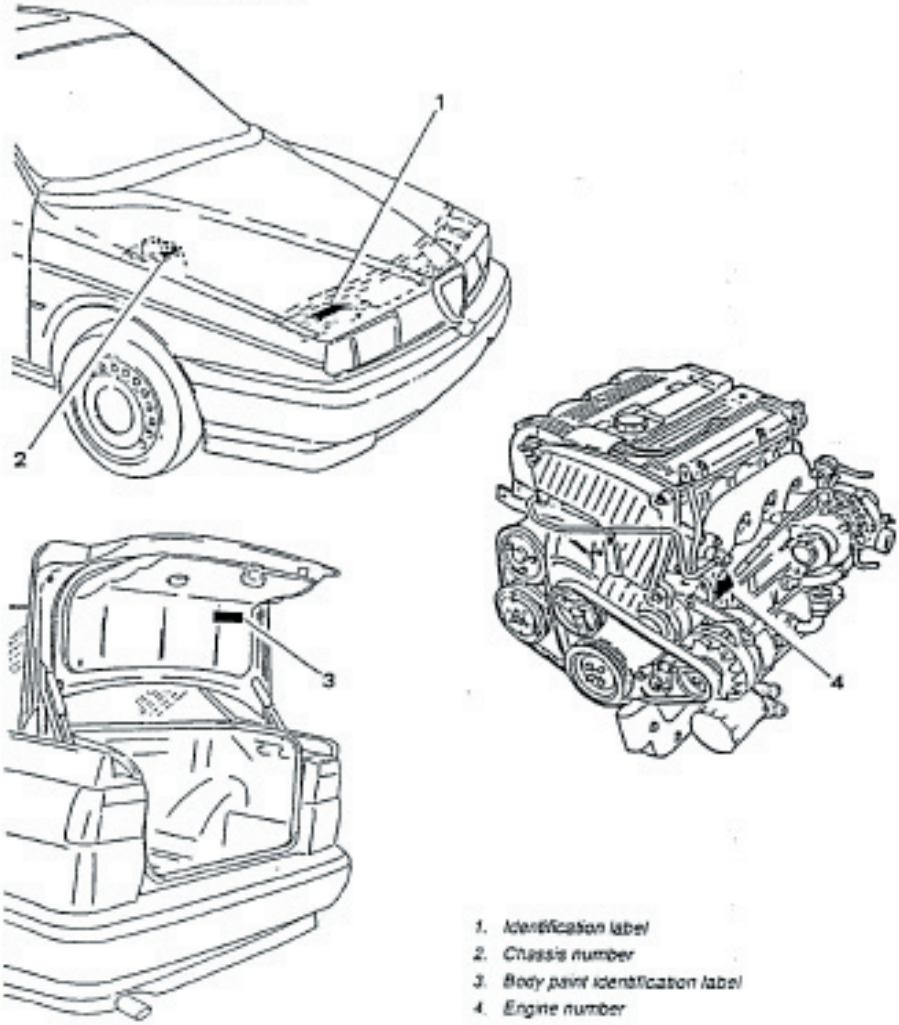

1. *Identification label*
2. *Chassis number*
3. *Body paint identification label*
4. *Engine number*

IDENTIFICATION TABLE

Version		155
Type		4 door saloon
Drive		LH + RH
N° Vehicle Type	on identification label	167A2C
	in engine compartment to one side of the upper attachment of right-hand shock absorber	167000
Progressive chassis N°		0.000.000.1
Progressive type and engine N°		AR 67203 from 000.001

Alfawiki.nl

OVERALL IDENTIFICATION LABEL

This can be found on the engine compartment cross-member and carries the following identification data:

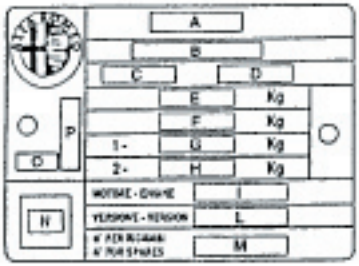

A. Manufacturer's trade name
B. Homologation number
C. Vehicle type identification code
D. Progressive chassis number
E. Maximum weight allowed for fully loaded vehicle
F. Maximum weight allowed for fully loaded vehicle with trailer
G. Maximum weight allowed on first axle (front)
H. Maximum weight allowed on second axle (rear)
I. Engine type
L. Body type serial number
M. Number for spare parts
N. Correct value of the smoke coefficient (for diesel and turbo diesel engines)
O. Supplier's code
P. Producing country

BODY PAINT IDENTIFICATION LABEL

This is located in the inner part of the luggage compartment and carries the following data:

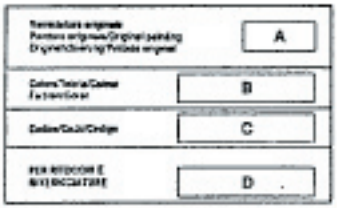

A. Paint manufacturer
B. Name of colour
C. Colour code
D. Touch-up or respray colour code

Alfawiki.nl

DIMENSIONS ('95 Versions)

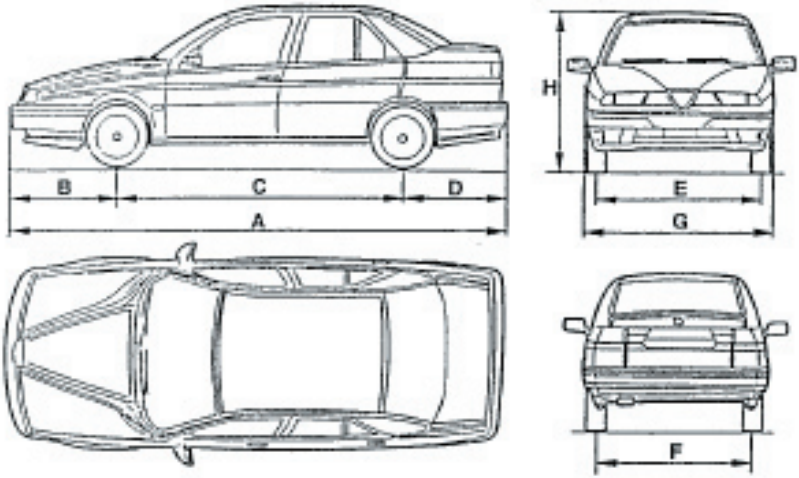

Dimensions \ Version			155 ⌧ (167A2E)
A	Maximum length	mm	4443
B	Front overhang	mm	960
C	Wheelbase	mm	2540
D	Rear overhang	mm	943
E	Front track	mm	(*)
F	Rear track	mm	(*)
G	Maximum width	mm	1730
H	Maximum height	mm	(*)

(*): Not available at time of going to press.

Alfawiki.nl

WEIGHTS AND LOADS ('95 Versions)

Weights and loads \ Version		155 (167A2E)
Kerb weight (without driver)	kg	1465
Towable weight (with brakes trailer)	kg	1500

WHEELS AND TYRES ('95 Versions)

Specifications \ Version		155 (167A2E)
Rim size		7J x 16" (▲)
Tyre size	standard	205/45 ZR16
	optional (for versions/markets, where applicable)	205/50 ZR15
Tyre pressure bar - kg/cm²	reduced load (2 persons)	front 2.5 rear 2.3
	full load	front 2.8 rear 2.5
Compact spare wheel	rim size	4B x 15" (in alloy)
	tyre size	115/70 R15 90M
	tyre pressure bar - kg/cm²	4.2

(▲): 6.5J x 15" with 205/50 ZR15 tyres

WARNING:
In the event of continuous driving at top speed, the pressures should be increased by 0.3 bar.

NOTE: To improve mating between the wheels and the car body, the rims have a specific camber for each rim size. Therefore, in addition to the correct rim and tyre match it is also necessary to check and maintain the rim camber angle.

RIM SIZE	RIM CAMBER ANGLE
6.5J x 15"	37 mm
7J x 16"	41 mm

Alfawiki.nl

SPECIFIC TOOLS

The specific tools play an important role in vehicle maintenance as they are essential in order to guarantee a complete, reliable and rapid service.
The times regarding the various operations have been calculated considering the use of the specific tools.
This manual list and illustrates the specific tools produced by the Vehicle Manufacturer for maintenance, overhaul and repair operations.
The tool identification code is formed by a new number of 10 digits and an old code of 1 letter and 5 digits.

e.g.: 1.824.016.000
(C.2.0129)

Recently produced tools only have the new number.
The assistance network can supply the specific tools in compliance with the procedures already in force at the single Alfa Romeo dealers.

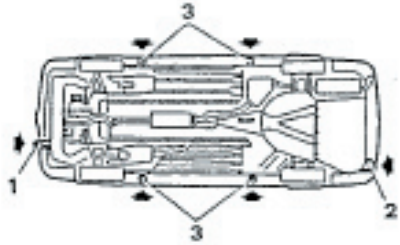

LIFTING AND TOWING POINTS

- If it is necessary to raise the vehicle, place the jacks in the places indicated in the illustration.

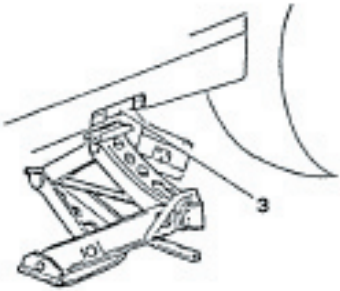

CAUTION:
After raising the vehicle using the jack, support it with safety stands.
Before raising the rear (front) end of the vehicle, block the wheels by placing chocks in front of (behind) the front (rear) wheels.

1. *Front tow hook*
2. *Rear tow hook*
3. *Lifting points*

Alfawiki.nl

When necessary the vehicle must be towed so that all four wheels touch the ground. Whenever this is not possible the vehicle must be transported by raising it completely off the ground (transport on another vehicle).

CAUTION:
Do not tow the vehicle with only two wheels on the ground as this may damage the transmission.

The vehicle is fitted with two tow hooks (front and rear) located on the right-hand side of the bumpers.
When towing or being towed drive with care, observing the laws in force.

Before towing ensure that the ignition switch of the vehicle being towed has been turned to the MAR position and then returned to the STOP position without withdrawing the key; in this way the steering will not lock while the vehicle is in motion.
When being towed no vacuum is created in the servo brake system and it is therefore necessary, when braking, to apply a greater force than normal on the brake pedal.
The power steering system will also not be activated and it will therefore be necessary to exert a greater force on the steering wheel.

CAUTION:
Do not remove the key from the ignition. If the key is however removed, check that the steering lock is not engaged.

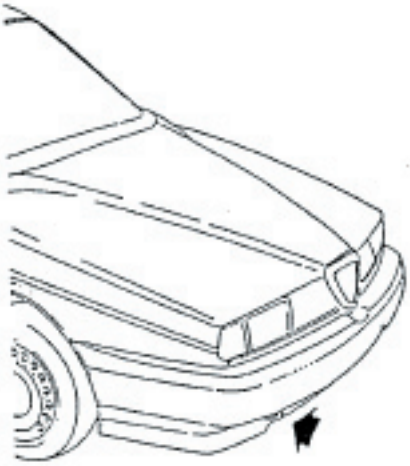

Front tow hook

Rear tow hook

Alfawiki.nl

MODEL IDENTIFICATION ('95 Versions)

MODEL IDENTIFICATION

Vehicle		155
Trim level		4-door saloon
Drive		LH + RH
Model no.	on identification label	167A2E
	in the engine compartment, at the side of the right shock absorber upper coupling	167000
Chassis serial number		(*)
Engine type and serial number		AR 67203 from (*)

(*) engine/chassis no. not available at time of going to press.

IDENTIFICATION LABEL

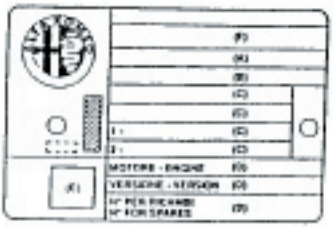

A. National homologation number
B. Chassis serial number
C. Space available for maximum weights authorized by the different national regulations
D. Space reserved for version (for example 167A2E) and any supplementary information
E. Smoke opacity index
F. Name of manufacturer

Alfawiki.nl

SERVICING OPERATIONS

The servicing operations comprise checking and restoring the efficiency of certain parts of the vehicle on which wear and phase displacement are foreseen after normal use.
The following table lists the servicing operations to be carried out at the specified mileage intervals.

WARNINGS:
Precautions to be taken before servicing operations. The engine compartment contains many moving parts, high temperature components and high voltage cables that can be dangerous.
Carefully follow the precautions given below:
- Turn the engine off and allow it to cool down.
- Do not smoke or use naked flames. The presence of fuel can cause a fire hazard.
- Always keep a fire extinguisher handy.

Operations to have done at the mileage shown	km x 1.000									
	20	40	60	80	100	120	140	160	180	200
Changing the engine oil and filter (at all events once a year) and checking lubrication circuit for leaks	Every 10,000 km									
Checking valve clearance (except engines with hydraulic tappets)		●		●		●		●		●
Changing the timing gear drive belt						●				
Checking the conditions of the trapezoidal belts		●		●		●		●		●
Checking the conditions of the Poly V belts				●				●		
Changing the air cleaner cartridge		●		●		●		●		●
Changing the fuel filter cartridge (petrol versions)				●				●		
Checking operation of the exhaust gas oxygen sensor (lambda probe)				●				●		
Changing the spark plugs	●	●	●	●	●	●	●	●	●	●
Changing the anti-freeze mixture				●				●		
Checking the gearbox and differential oil level (only versions with manual gearbox)				●				●		
Checking conditions of protective bellows for axle shafts, power steering and steering knuckle caps		●		●		●		●		●
Checking brake and fuel system pipes for leaks		●		●		●		●		●
Checking handbrake travel		●		●		●		●		●
Checking power steering oil level		●		●		●		●		●

Alfawiki.nl

Alfawiki.nl

SERVICING OPERATIONS (Continued)

To keep the car in good operating conditions, the following recommendations should be adhered to carefully:

Every 500 kms (or when refuelling) check:
- the engine oil level.
- the level of the fluid in the coolant circuit.
- the level of the brake/clutch fluid.
- the tyre pressures.
- the level of the fluid in the windscreen wiper/washer system.

Engine oil and filter
To be changed at the specified intervals.
At all events, they must be changed once a year.

Air cleaner
If the car is habitually used on dusty roads, the air cleaner should be changed more often than specified.

Brake pads
Wear of the brake pads is indicated by the turning on of a warning light on the instrument cluster.
When changing the front pads, also check the rear ones. However, depending on the use of the car, the rear pads might not need to be changed immediately, in which case, you are recommended to check them at a later stage.

Brake and clutch fluid
The brake fluid is hygroscopic, i.e. it absorbs moisture. To avoid faulty braking, change the brake fluid every two years, regardless of the mileage driven.

Battery
During hot weather, check the electrolyte level frequently.

Dust and/or pollen filter (if fitted)
Once a year, preferably at the beginning of summer, have the conditions of the dust and/or pollen filter (if fitted) checked by the Alfa Romeo Service Network.
If the car is mostly used for town/motorway driving or on dusty roads, it is wise to check more often than indicated.
Warning: Failure to change the filter can considerably reduce the performance of the air conditioner system.

Anti-freeze
It is advisable to top up with **Alfa Romeo Climafluid Super Permanent -40°C** to conserve the protective properties of the mixture.

Notes
Under special driving conditions (e.g. on roads sprinkled with antifreeze salt and/or corrosive substances, rough road surfaces, etc.) often check the boots of the axle shafts and steering box, and clean and lubricate joints, hinges, door catches, bonnet catch, etc.)
When forced to use fuel, lubricants and/or fluids in general with characteristics other than those specified by the manufacturer (in emergencies), replace the fluids and corresponding filters at the earliest opportunity.

Alfawiki.nl

PROGRAMMED CHECKS AND MAINTENANCE

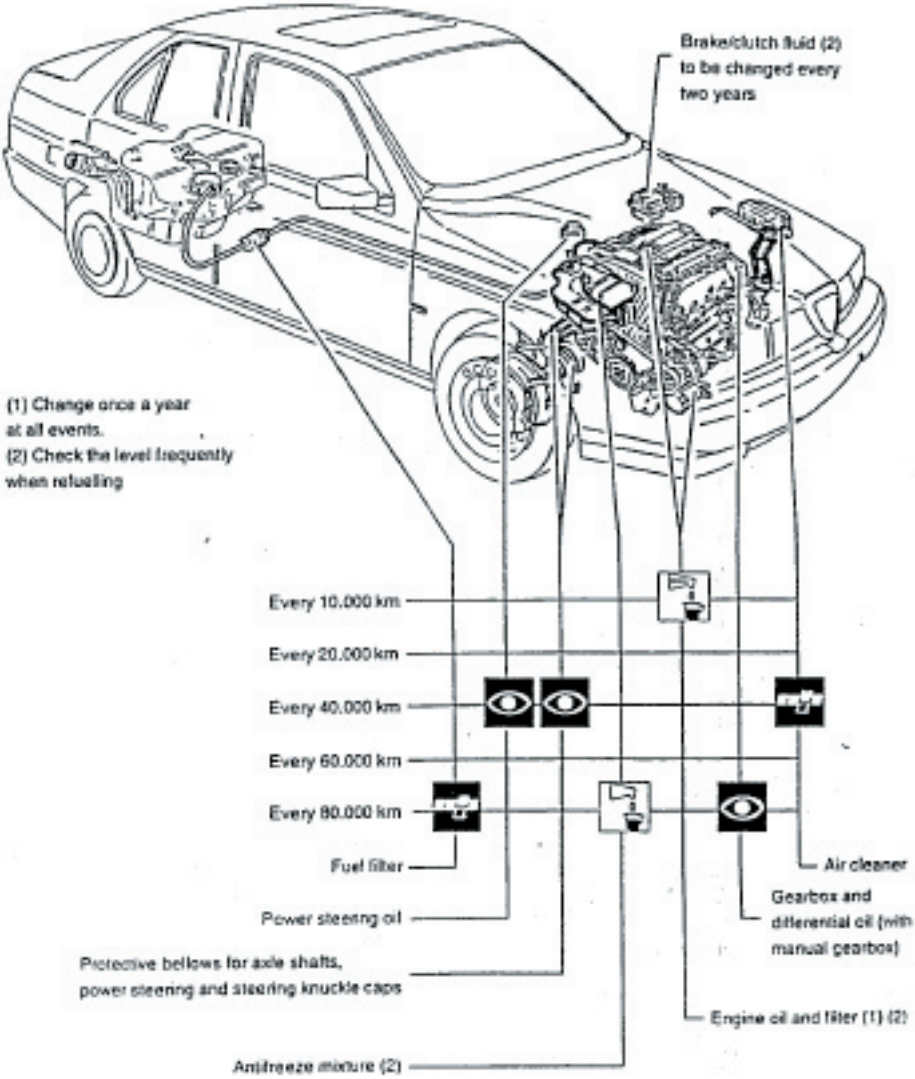

Alfawiki.nl

(*): This page replaces pages 00-15/16/17 of publication PA4655A24x4000 of 12 - 1991. Therefore pages 00-16/17 are deleted

FLUIDS AND LUBRICANTS

Type	Group ref.	Application	Classification	Name
OIL	01 - Engine (1)	Engine (Refilling)	API SG CCMC G5 SAE 10W/40	SELENIA SPECIAL FORMULA ALFA ROMEO 10W/40
	13 - Gearbox and differential	Gearbox and differential (Refilling)	API GL-4	TUTELA ZC 80/S
	18 - Rear axle 4-wheel drive	Rear axle (Refilling)	SAE 80W/90 API GL-5	TUTELA W90/M - DA
	60 - Climate control	Compressor (Refilling)	–	SUNISO 5GS SANDEN SP 10 "PAG" (▲)
FLUIDO	07 - Engine cooling	Cooling circuit (Refilling)	–	ALFA ROMEO CLIMAFLUID SUPER PERMANENT -40°C
	12 - Clutch	Brake & clutch hydraulic circuit (Refilling)	DOT 4 SAE J 1703 F	ALFA ROMEO BRAKE FLUID SUPER DOT 4
	22 - Brakes			
	23 - Steering	Power steering system (Refilling)	G.M. DEXRON II	TUTELA GWA
	60 - Climate control	Conditioning system circuit (Refilling)	–	RIVOIRA Freon 12 - RIVOIRA: SUVA R134a (▲) - HOECHST - TAZZETTI: FRIGEN R134a (▲) - ICI - TAZZETTI: KLEA R134a (▲)
GREASE	SEE SPECIFIC FUNCTIONAL GROUPS			

(1): For decidedly sportive use of the car fully synthetic SELENIA Racing 10W/60 engine oil is recommended

(▲): From chassis no. 105779 - 1003349 (on two assembly lines).

Alfawiki.nl

APPROXIMATE SERVICING CAPACITIES

Capacity / Version		155
Fuel tank		60 litres
Fuel reserve		~ 5 litres
Engine oil	Total capacity: sump + filter + wells + radiator	5.5 litres
	Sump + filter (for periodical replacement)	4.5 litres
	Oil filter	0.4 litres
	Camshaft wells + oil radiator	1.0 litres
Oil for gearbox - front differential and central converter		4 litres
Rear differential oil		1.4 litres
Brake - clutch circuit fluid		0.6 litres
Power steering system oil		1.0 litres
Antifreeze mixture		9.1 litres
Conditioner compressor oil		135 g 240 ± 15 cm^3 (▲)
Conditioning system fluid		950 g 700 g (▲)

(▲): From chassis no. 105779 - 1003349 (on two assembly lines).

SPECIFIED FUEL

The octane number of a fuel defines its resistance to detonation: it is essential to use fuel with the correct number of octanes as this will prevent pinging which may prove dangerous for the engine.
The higher the octane number the greater the anti-detonation capacity.

The 155 model has been designed to run on unleaded petrol with an octane number of 95 RON (Research Octane Number).
These vehicles are all fitted with a catalytic converter. To enable this to function with the highest degree of efficiency, unleaded petrol must be used, as the lead deposits contained in other fuels build up on the surface of the catalytic converter and prevent it from working properly.
The size of the filler necks has been reduced in order to prevent the nozzles used on leaded petrol pumps from being inserted.

Alfawiki.nl

ENGINE MAINTENANCE OPERATIONS

REPLACING ENGINE OIL AND FILTER

CAUTION:
Engine oil can be harmful to the skin. Keep all contact to a minimum and wash off with soap and water.

- Place the vehicle on a lift.

1. When the engine is warm remove the filler cap.
2. Withdraw the dipstick.

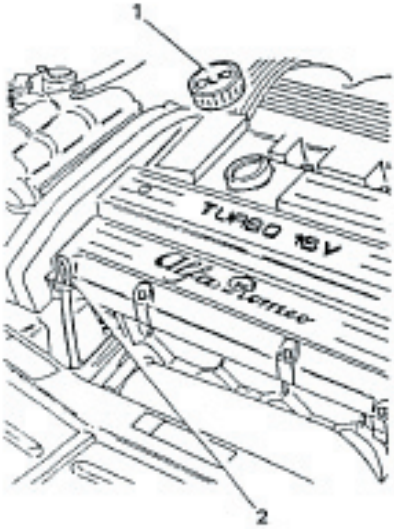

- Raise the vehicle.

1. Unscrew the drainage cap and let the oil to drain off for at least 15 minutes.

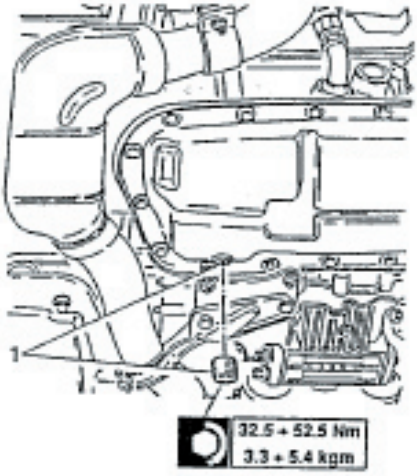

CAUTION:
To avoid pollution do not dispose of waste oil in the environment. Take all waste oil to your local collection centre.

CAUTION:
Whitish substances in the oil indicate contamination by engine coolant.
Low viscosity is due to dilution with fuel.

1. Using to appropriate tool, remove the oil filter.

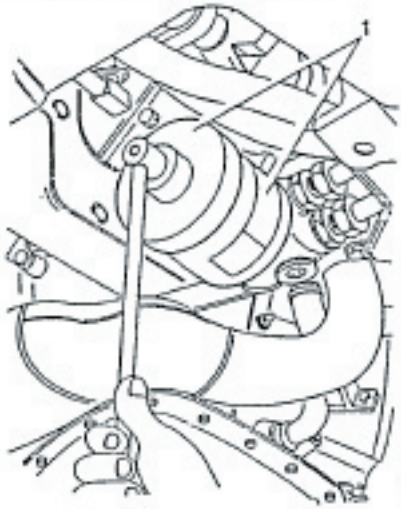

- Clean the drainage cap and tighten it along with its gasket, to the specified torque.
- Wipe the gasket of the new filter with oil and tighten on by hand.
- Lower the vehicle.
- Refill the engine with oil of the specified type and in the specified quantity.
- Check the oil level using the dipstick.

CAUTION:
The oil level should be checked when the vehicle is on a level surface.
If the oil level is above the MAX mark there will be an excessive evaporation which will cause a loss in oil pressure.

- Refit the filler cap and run the engine for about two minutes. Switch off the engine and wait for a few minutes.
- Check that the oil level is correct and that there are no leaks.

CHECKING AND ADJUSTING VALVE CLEARANCE

1. Remove the spark plug cover.

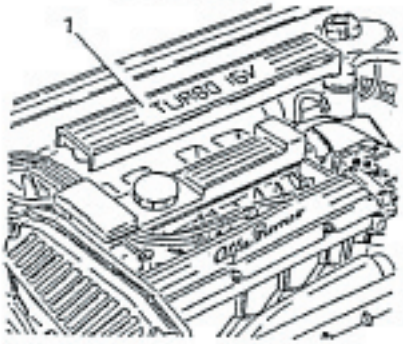

1. Remove the spark plug cable retaining cover.

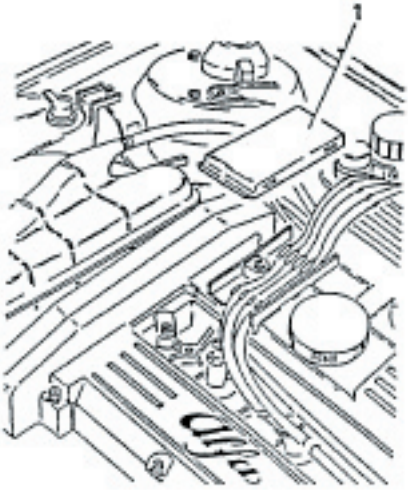

1 Disconnect the high voltage cables from the spark plugs and remove the spark plugs.

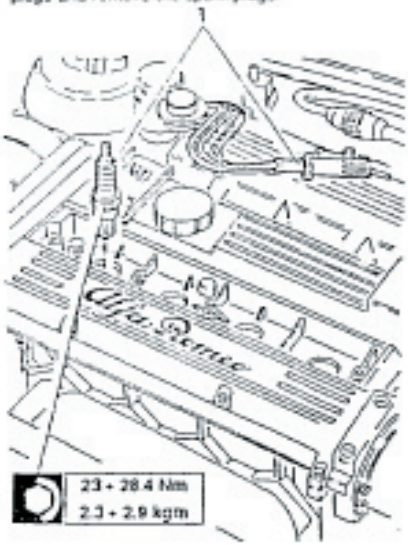

1. Disconnect the oil vapour recovery hose from the timing cover.

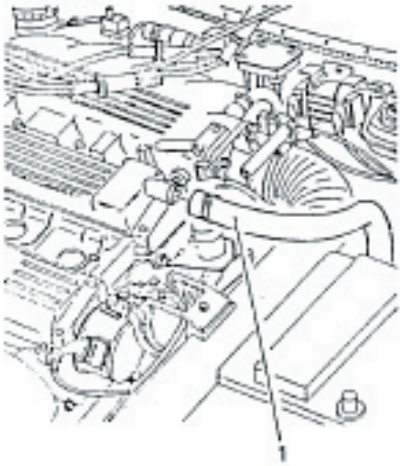

1. Loosen the upper screws securing the timing cover.

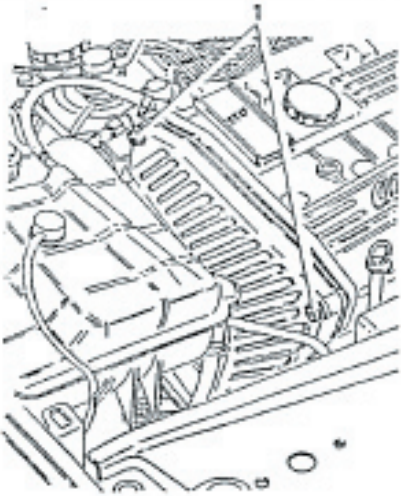

1. Loosen the retaining screws and remove the timing cover.

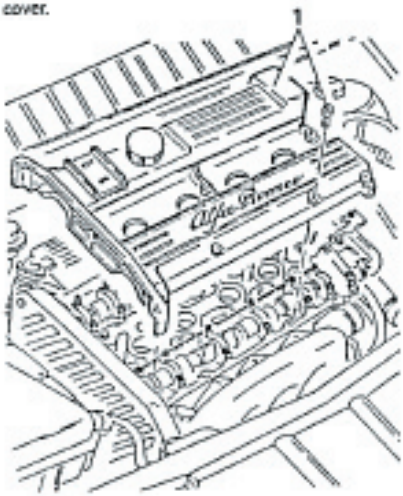

Alfawiki.nl

– Rotate the camshaft until the cam is perpendicular to the valve clearance adjustment cap to be controlled.

1. When the engine is cold check that the clearance between the cam heel radius and the relative tappets is within the specified limits.

Valve clearance intake side	0.36 - 0.44 mm
Valve clearance exhaust side	0.46 - 0.54 mm

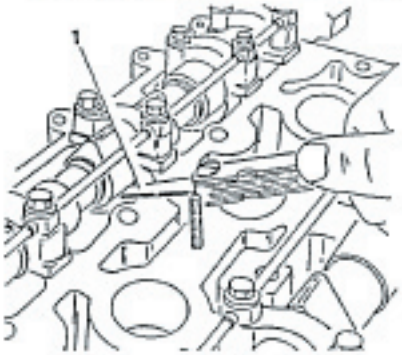

– If the valve clearance is not within the specified limits, adjust as follows:

1. Using the pressure lever N° 1.820.262.000 lower the tappets.

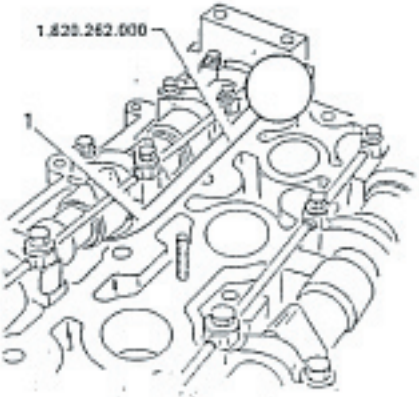

1. Position tool N° 1.820.261.000 to secure the tappets and arranging the notches on the edges of the tappets so that the valve clearance adjustment cap can be removed easily.

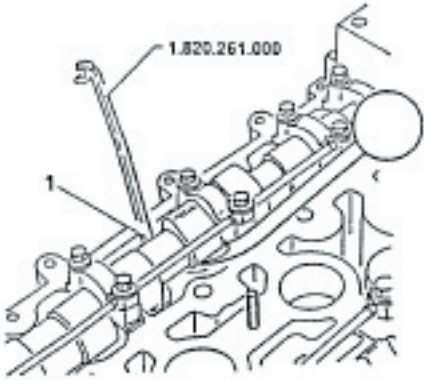

1. Pull off the tappet adjustment cap using a scribe and remove it with a magnet.

– Replace the cap with another of the same thickness and repeat the above operations for the other valves.

Alfawiki.nl

REPLACING TIMING BELT

1. Place the vehicle on a lift.
- Disconnect the negative cable from the battery.

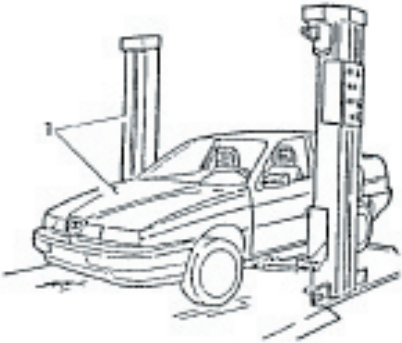

1. Empty the engine coolant expansion tank using the appropriate syringe.

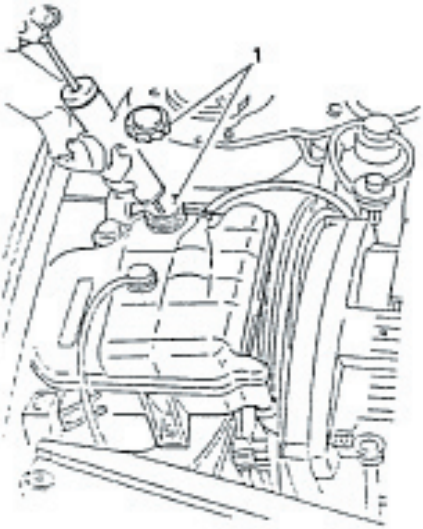

1. Disconnect the electrical connection from the engine coolant minimum level sensor.

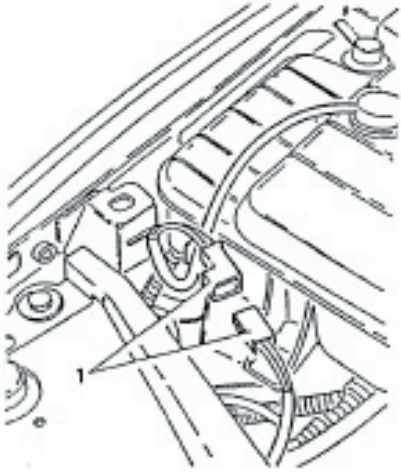

1. Disconnect the deaeration and engine coolant return hose from the expansion tank.

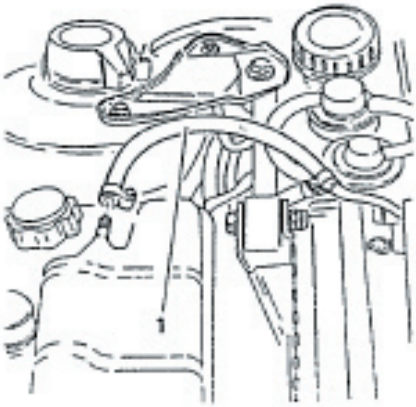

Alfawiki.nl

1. Disconnect the engine coolant delivery hose from the expansion tank.

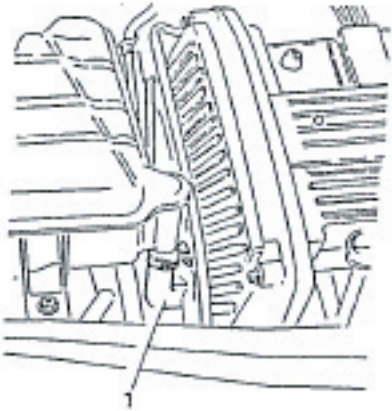

1. Loosen the retaining screws and remove the expansion tank.

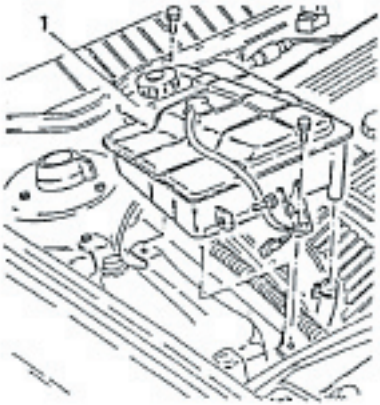

1. Remove the spark plug cover.

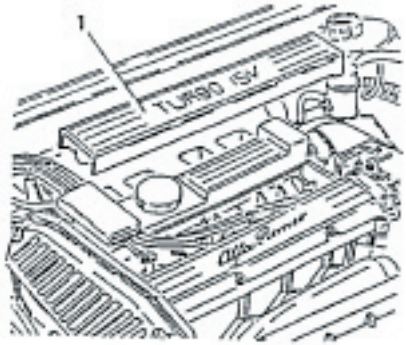

– Remove the front right-hand wheel.

1. Remove the dustguard from the right-hand wheel housing.

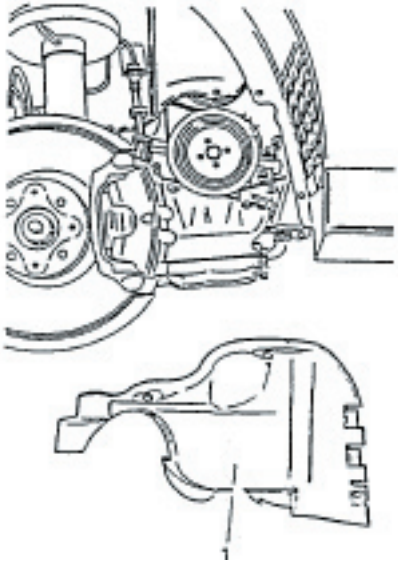

Alfawiki.nl

- Check that the piston of cylinder n° 4 is at T.D.C. during firing by operating as follows:

1. Check that the reference notches on the timing pulley coincide with the reference marks on the timing cover.
2. Check that the notch on the crankshaft pulley coincides with that engraved on the timing cover.

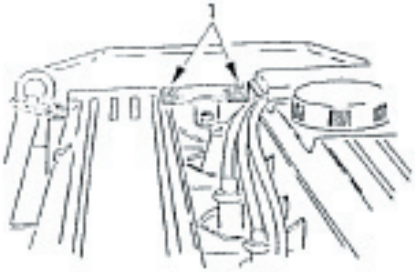

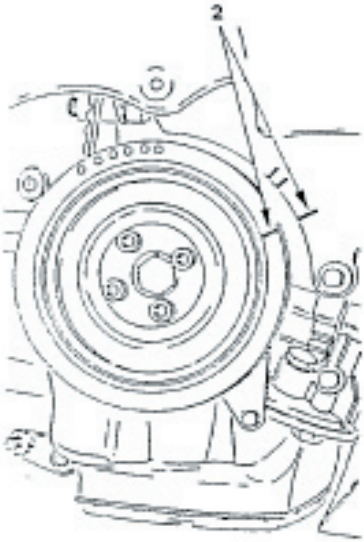

- Raise the vehicle on the lift.

1. Disconnect the two flanges of the front section of the exhaust pipe from the two catalytic converters.

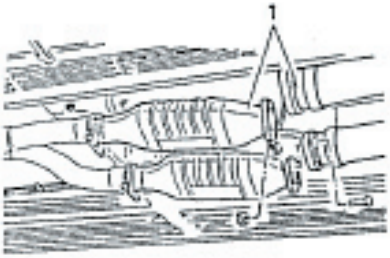

1. Loosen the collars and remove the two catalytic converters.

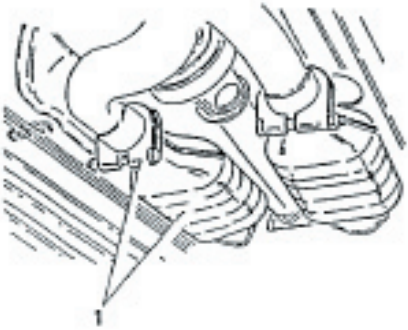

Alfawiki.nl

1. Loosen the screws and the nuts securing the front section of the exhaust pipe to the turbocharger and to the supporting brackets.
2. Remove the front section of the exhaust pipe.
3. Remove the gasket.

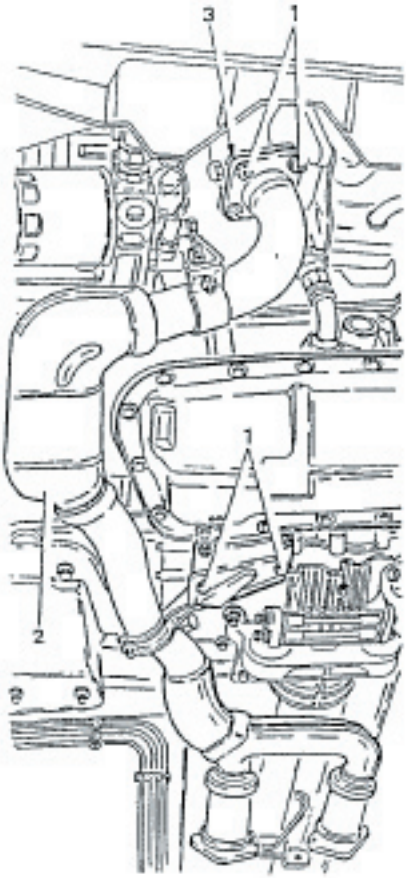

1. Position a suitable column lift under the central differential.
2. Loosen the screws and the bolts securing the rear engine unit support and remove the support.

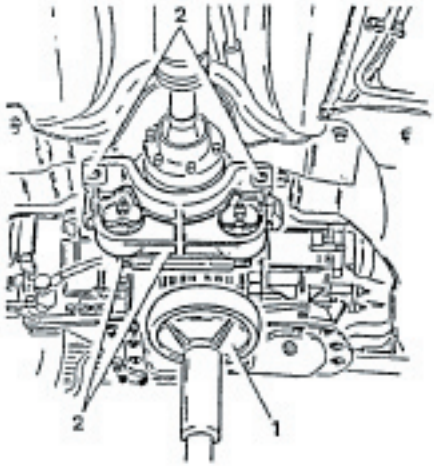

– Remove the column lift.

1. Remove the flexible support securing the exhaust pipe.
2. Remove the safety bracket from the drive shaft.

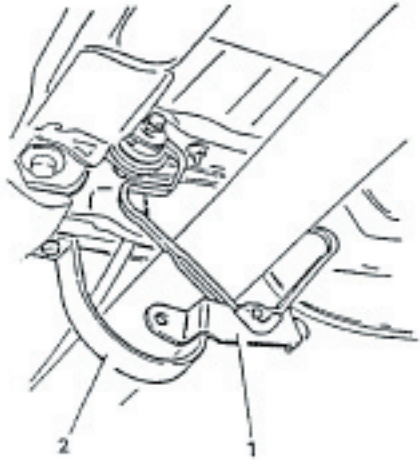

Alfawiki.nl

1. Make reference notches on the flanges of the coupling between the front section of the drive shaft and the central differential and separate them by unscrewing the relative screws.

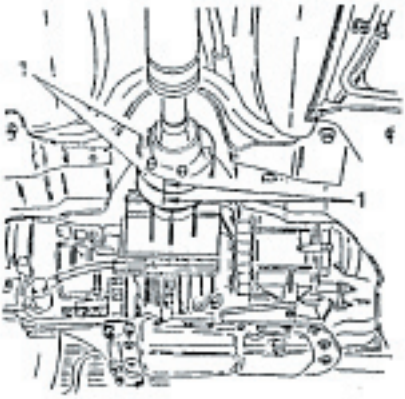

1. Make reference notches on the flanges of the coupling between the front and rear sections of the drive shaft and separate them by unscrewing the relative screws.

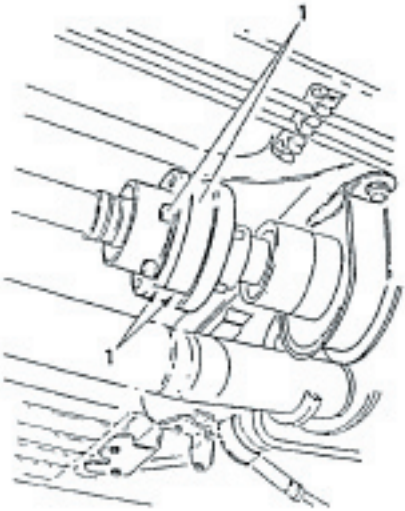

1. Support the front and central sections of the drive shaft using an appropriate tool and after unscrewing the screws securing the central flexible support remove them.

Alfawiki.nl

1. Loosen the retaining screws and remove the cross-member and swinging arms (see GROUP 21).

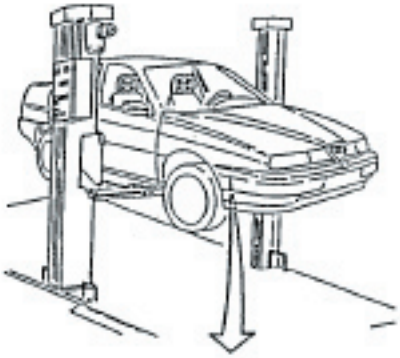

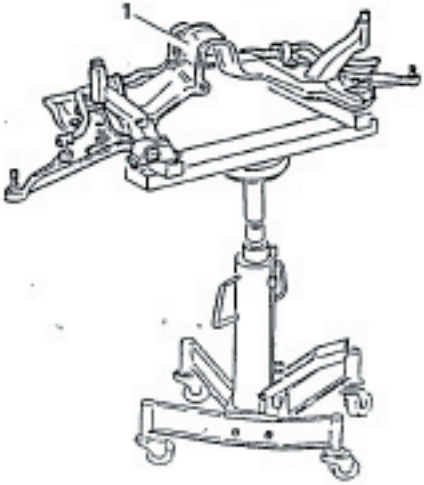

1. Position a suitable hydraulic lift under the central differential and raise the rear part of the engine unit.
2. Position engine unit support tool N° 1.820.263.000.

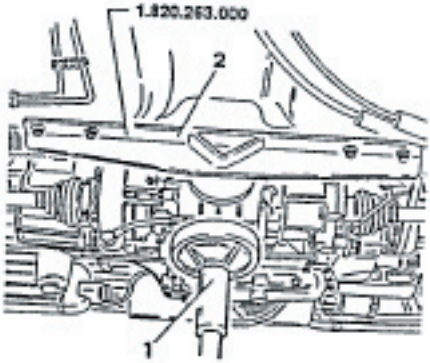

– Lower the vehicle.

1. Remove the engine damper rod.

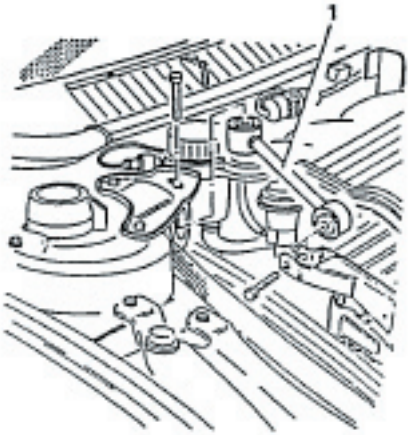

Alfawiki.nl

1. Disconnect the vacuum signal delivery hose from the EGR valve.

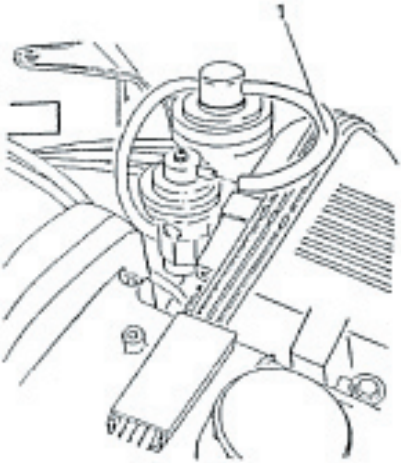

1. Disconnect the exhaust gas to pneumatic signal modulation valve delivery hose from the EGR valve.

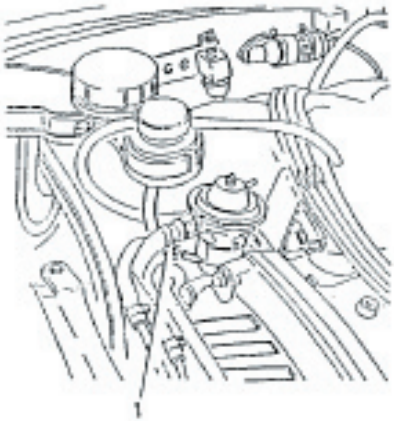

1. Disconnect the connection between the exhaust gas intake from the exhaust manifold.
2. Loosen the retaining screws and remove the EGR valve together with the exhaust gas intake hose.
3. Remove the spark plug cables support bracket.
4. Remove the spacer and the gaskets.
5. Remove the gaskets.

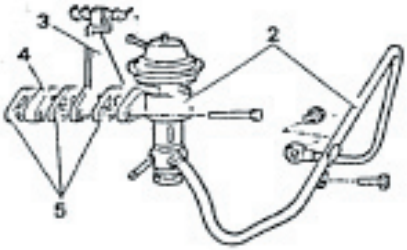

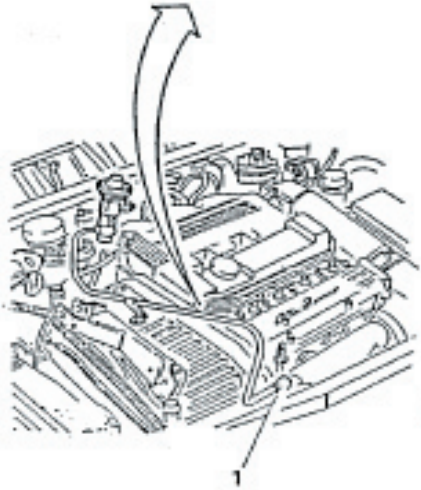

Alfawiki.nl

1. Loosen the upper screws securing the timing cover.

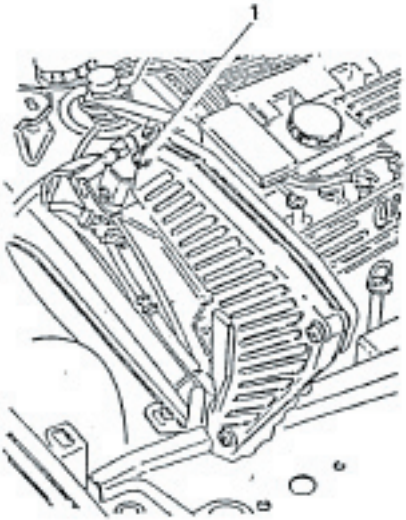

– Raise the vehicle.

1. Loosen the two bolts securing the alternator.

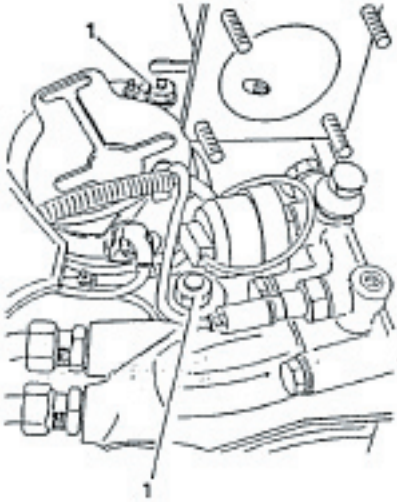

1. Remove the alternator - water pump drive belt.

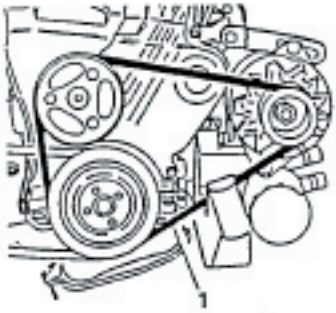

1. Loosen the retaining screws and remove the water pump pulley.

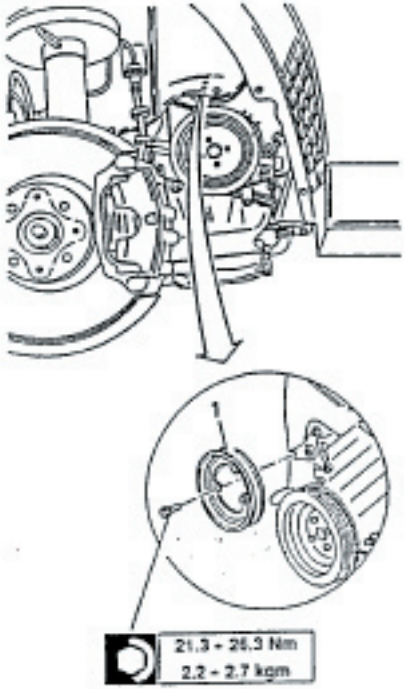

Alfawiki.nl

1. Loosen the two upper screws and the two I bolts securing the air conditioning compressor and remove the drive belt.

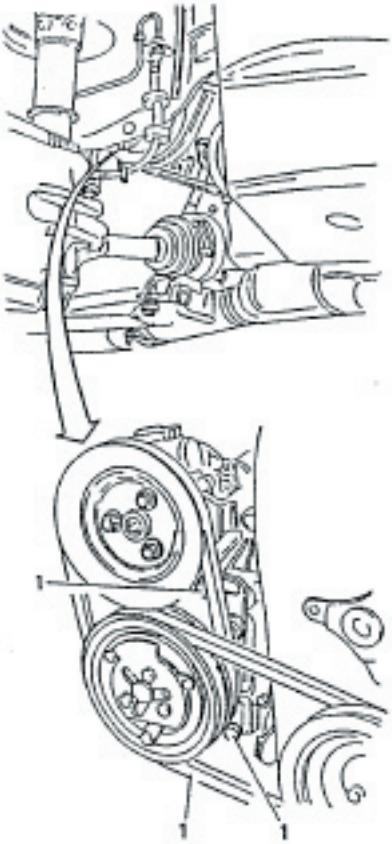

1. Loosen the retaining screws and remove the auxiliary drive pulley.

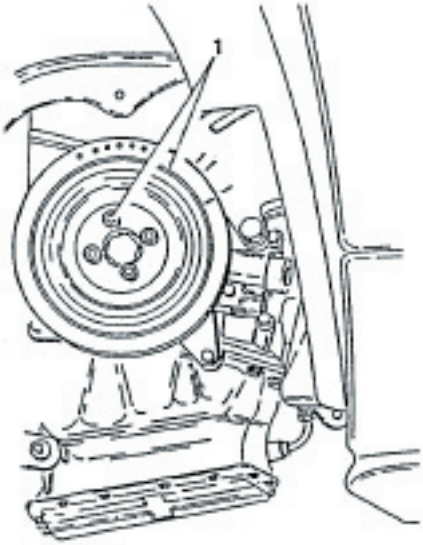

1. Remove the phonic wheel of the r.p.m. and timing sensor.

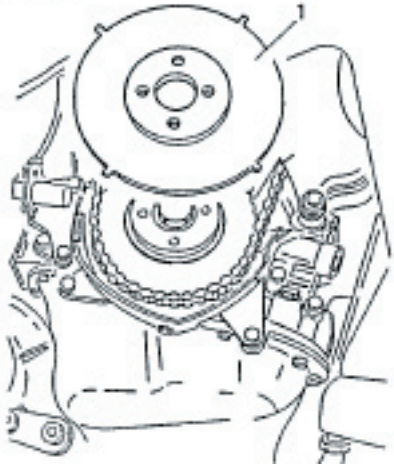

Alfawiki.nl

1. Loosen the screw and remove the r.p.m. and timing sensor cable retaining plate.

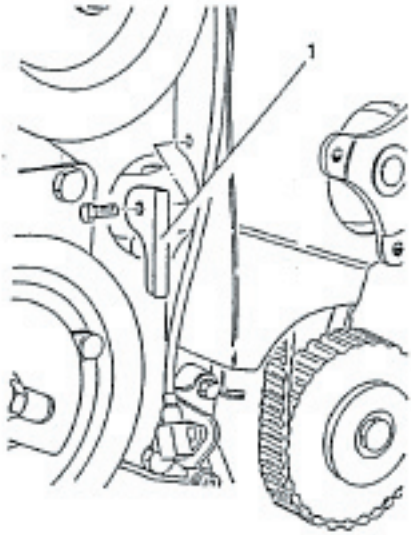

1. Loosen the screws securing the timing belt cover.

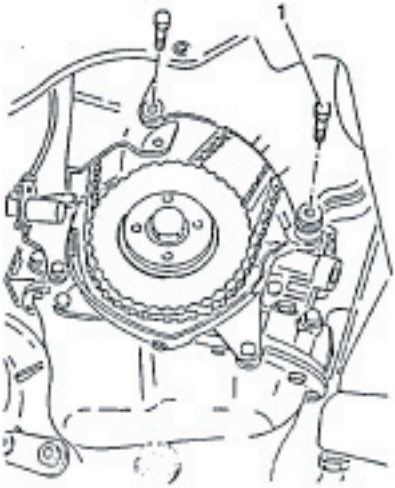

- Lower the vehicle.
1. Remove the timing belt cover.

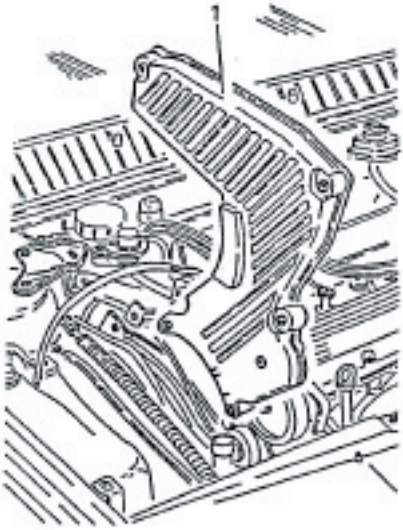

1. Loosen the two screws securing the metal timing belt cover to the engine damper rod support bracket and remove the cover.

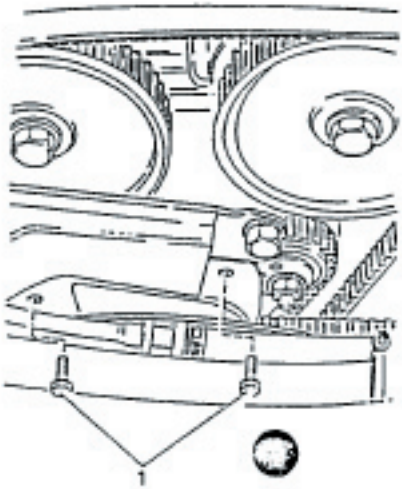

Alfawiki.nl

1. Loosen the three screws and remove the engine damper rod support bracket.
2. Remove the spacers.

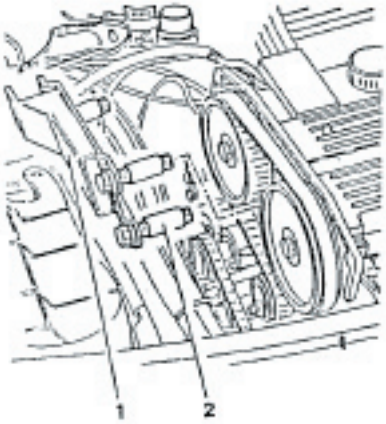

1. Remove the metal timing belt cover which was loosened previously.

– Raise the vehicle.
1. Loosen the nut and remove the counter-shaft drive belt tensioner.
2. Remove the counter-shaft drive belt.

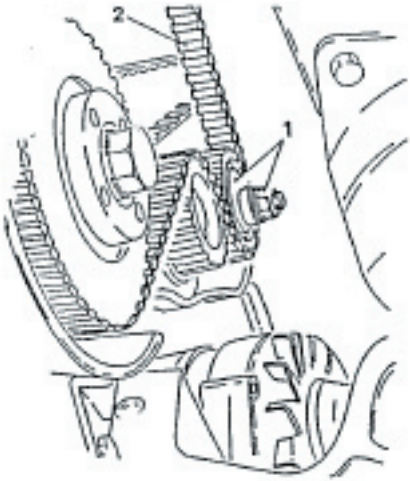

– Lower the vehicle.
1. Loosen the nut and remove the timing belt tensioner.

Alfawiki.nl

1. Pull off the timing belt from the pulley and remove it.

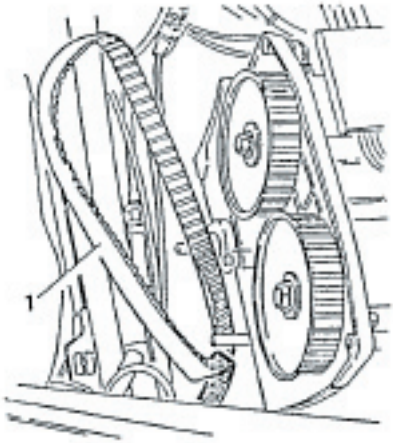

Refit by reversing the procedures followed for removal and note the following:

- Refit the counter-shaft drive belt and timing belt tensioner.
1. Check that the notches on the timing pulley coincide with those of the timing cover.
2. Check that the notch on the counter-shaft pulley faces upwards.
3. Install the timing belt ensuring that the teeth of the pulleys are coupled correctly.

CAUTION:
As the belt is made of fibre it must in no way be bent when being fitted to the vehicle.

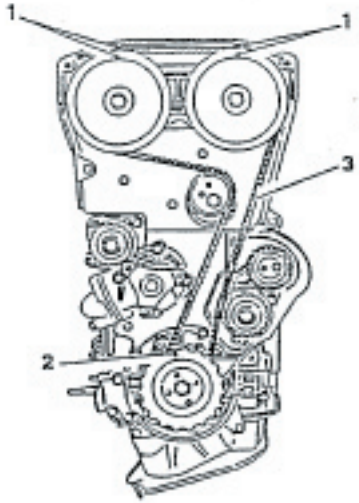

1. Fit tool N° 1.824.016.000 (C.2.0129) onto tool N° 1.824.017.000 (C.2.0130).
2. Position the weight, without the milled part, at a distance of 100 mm on the rule and lock it into position.

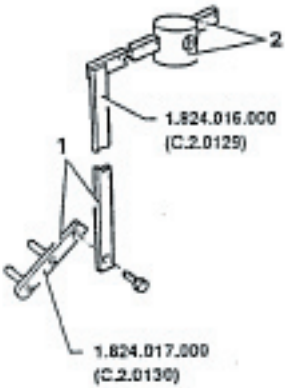

Alfawiki.nl

1. Apply the tool assembled in this way, onto the belt tensioner as shown in the illustration and, acting on the articulation, move the rule until it is horizontal.
- Settle the toothed belt by rotating the crankshaft twice in the normal direction of rotation.
2. Tighten the nut securing the belt tensioner to the correct torque.

CAUTION:
During this operation the rule may move from its horizontal position. In this case it is necessary to act once again on the belt tensioner, return the rule to its original position and repeat the operation.

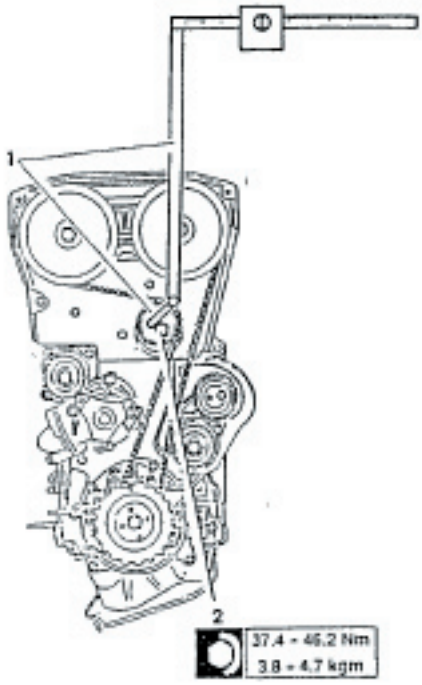

1. Move the counter-shaft pulley so that the reference notch marked on it is in line with the reference mark located on the intake side of the counter-shaft water pump and the reference mark located on the exhaust side of the counter-shaft sheet metal cover.
2. Ensure that the reference located on the counter-shaft drive pulley faces upwards.
3. Fit the toothed belt ensuring that the teeth on all the toothed pulleys are correctly coupled.

CAUTION:
As the belt is made of fibre it must in no way be bent when being fitted to the vehicle

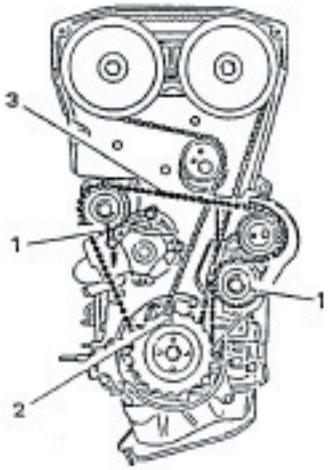

Alfawiki.nl

- Fit support tool N° 1.820.260.000 on tool N° 1.824.016.000 (C.2.0129) and position the weight without the milled part, at a distance of 205 mm on the millimeter rule, and lock it in position.

1. Apply the tool assembled in this way, onto the belt tensioner as shown in the illustration and, acting on the articulation, move the rule until it is horizontal.

- Settle the toothed belt by rotating the crankshaft twice in the normal direction of rotation.

2. Tighten the belt tensioner retaining nut to the correct torque.

CAUTION:
During this operation the rule may move from its horizontal position. In this case it is necessary to act once again on the belt tensioner, return the rule to its original position and repeat the operation.

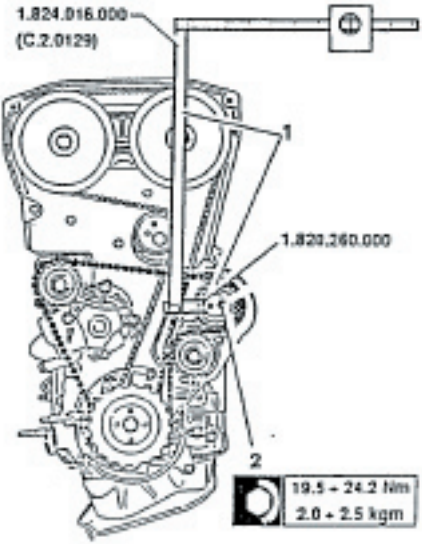

- Remove the belt tensioner tools.
- Tension the auxiliary unit drive belts (see specific paragraphs).

AUXILIARY UNIT BELTS

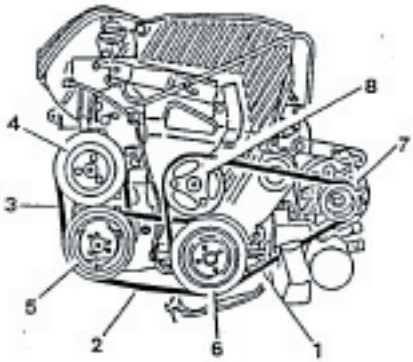

1. *Alternator - water pump drive belt*
2. *Air conditioning compressor drive belt*
3. *Power steering pump drive belt*
4. *Power steering pump*
5. *Air conditioning compressor*
6. *Auxiliary unit control pulley*
7. *Alternator*
8. *Water pump.*

NOTE: **When checking the tension of the belt also check the belt for damage especially:**
- cuts
- cracks
- superficial wearing of material (shows up as smooth and shiny)
- dry or hardened parts (loss of traction).
If one of the above is discovered, replace the belt.

CAUTION:
If the belt comes into contact with oil or solvents its elasticity may be affected leading to a loss of traction.

Alfawiki.nl

WATER PUMP ALTERNATOR DRIVE BELT

Checking and tensioning

- Place the vehicle on a lift and raise it.

1. Operating as shown in the diagram, measure the tension of the belt using tool N 1.824.015.000 (C.2.0128).

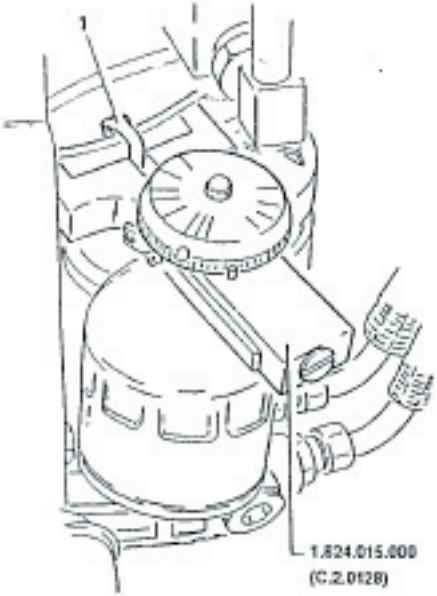

- Check that the tension values measured using the appropriate tool are as specified.

Water pump - alternator POLY-V drive belt tension	
When refitting	520 - 670 N
Minimum	300 N
Re-tensioning	300 - 450 N

NOTE: The belt can be re-tensioned after a short trial period operating as follows:
- warm the engine to normal running temperature
- switch off the engine and wait until it cools
- re-tension the belt to the correct value.

- If the values are incorrect, operate as follows:

1. Working from under the vehicle loosen the lower bolt (fulcrum) securing the alternator.

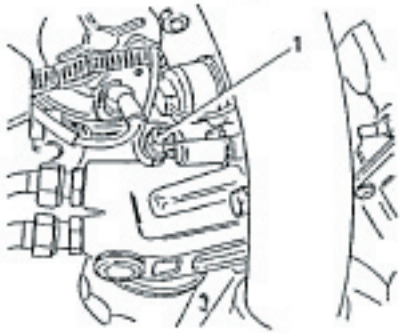

- Lower the vehicle.

1. Loosen the upper bolt securing the alternator to the slotted tensioning bracket.

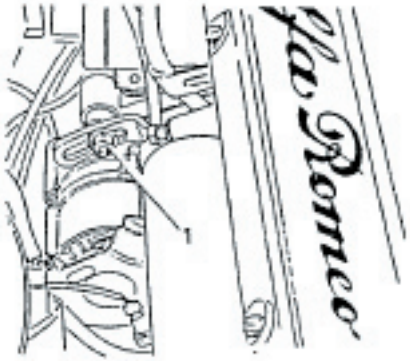

Alfawiki.nl

1. Move the alternator to one side to increase the tension on the belt.
2. Tighten the upper bolt securing the alternator, and after raising the vehicle, check the tension of the belt.
3. If the tension is correct also tighten the lower bolt securing the alternator.

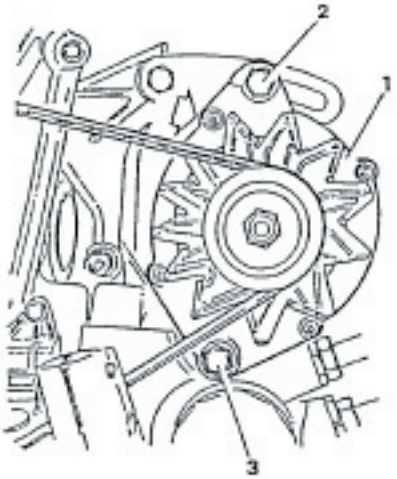

Substitution

- Place the vehicle on a lift.
- Remove the front right-hand wheel.
- Remove the spray guard from the front right-hand wheel housing.
- Raise the vehicle.

1. Loosen the lower bolt (fulcrum) securing the alternator.

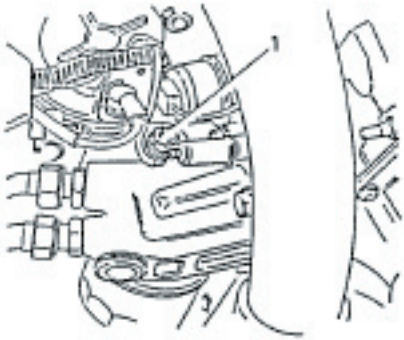

- Lower the vehicle.

1. Loosen the upper bolt securing the alternator to the slotted tensioning bracket.
2. Remove the alternator - water pump drive belt.

- Fit a new belt by reversing the procedure followed for removal and tension it following the procedure given in the preceding paragraph.

Alfawiki.nl

AIR CONDITIONING COMPRESSOR DRIVE BELT

Checking and tensioning

- Place the vehicle on a lift.
- Remove the front right-hand wheel.
- Remove the spray guard from the front right-hand wheel housing.
- Raise the vehicle.

1. Using tool N° 1.824.015.000 (C.2.0128) measure the tension on the belt as shown in the illustration.

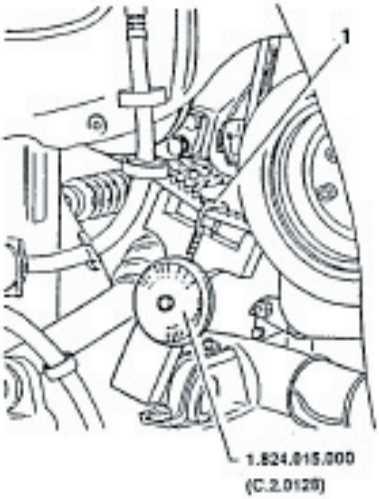

- Check that the tension values measured using the appropriate instrument are within the specified limits.

Air conditioning compressor trapezoidal drive belt tension	
when fitting	500 - 650 N
Minimum	350 N
Re-tensioning	350 - 450 N

NOTE: The belt can be re-tensioned after a short test period operating as follows:
- warm the engine to normal running temperature
- switch off the engine and wait until it cools
- re-tension the belt to the correct value.

- If the tension values are incorrect, operate as follows:

1. Disconnect the two flanges on the front section of the exhaust pipe from the two catalytic converters.

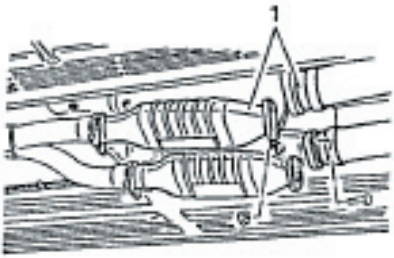

1. Loosen the collars and remove the two catalytic converters.

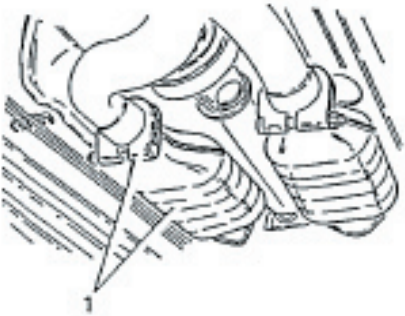

Alfawiki.nl

1. Loosen the screws and the nuts securing the front section of the exhaust pipe to the turbocharger and to the support brackets.
2. Remove the front section of the exhaust pipe.
3. Remove the gasket.

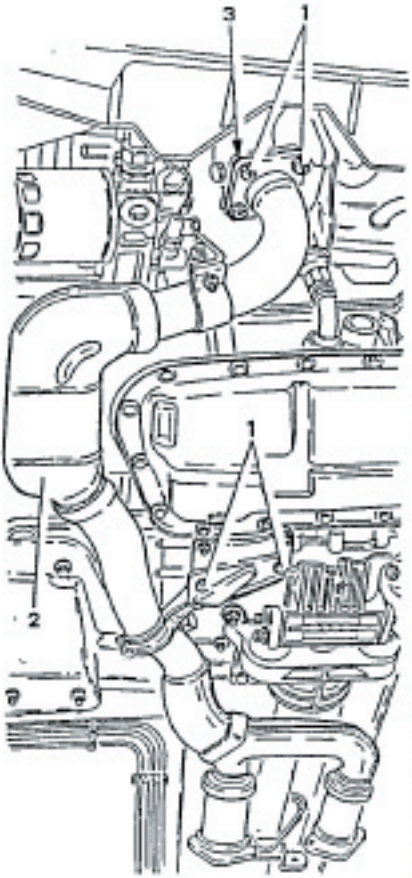

1. Position a suitable column lift under the central differential.
2. Loosen the screws and the bolts securing the engine unit rear support and remove the support.

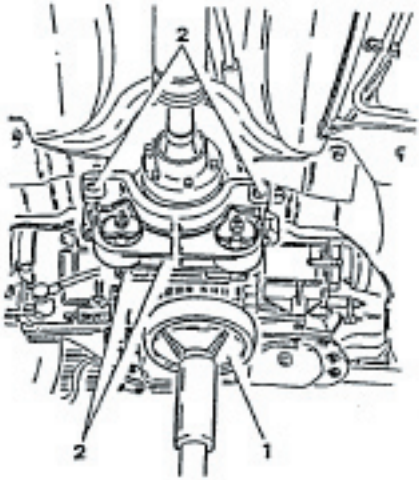

– Remove the column lift.

1. Remove the flexible support securing the exhaust pipe.
2. Remove the drive shaft safety bracket.

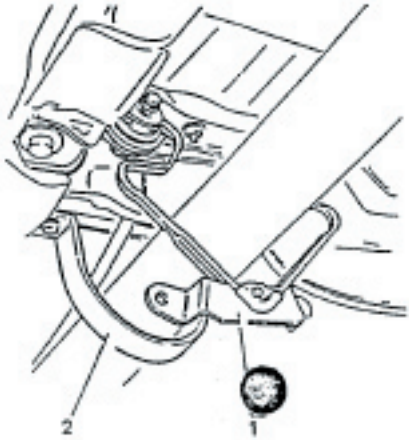

Alfawiki.nl

1. Make reference notches on the flanges of the coupling between the front section of the drive shaft and the central differential and separate them by unscrewing the relative screws.

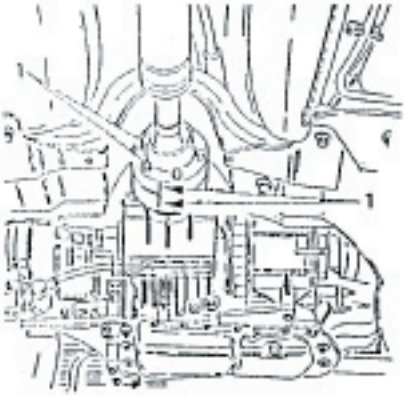

1. Make reference notches on the flanges of the coupling between the front and rear sections of the drive shaft and separate them by unscrewing the relative screws.

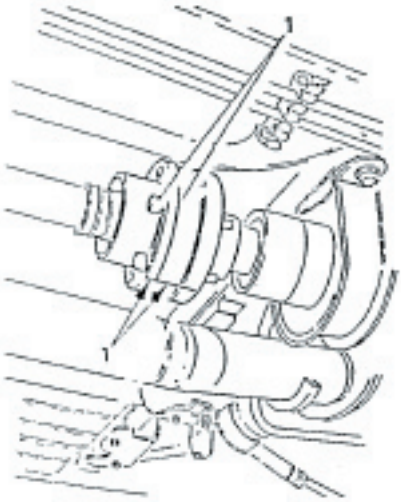

1. Support the front and central sections of the drive shaft using an appropriate tool and after unscrewing the screws securing the central flexible support, remove them.

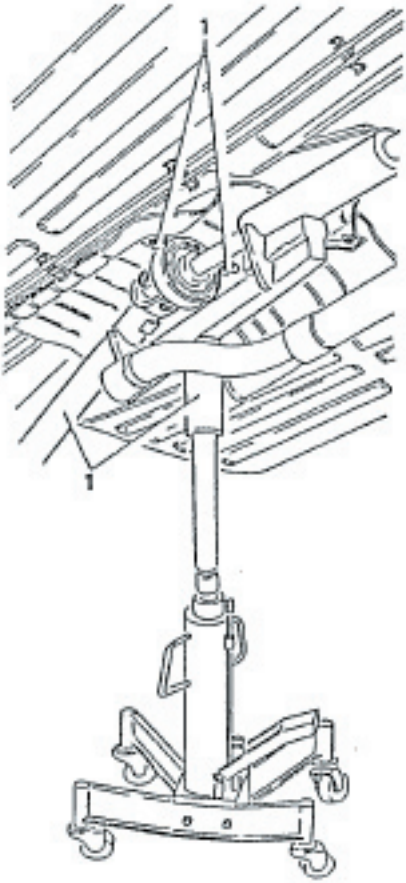

Alfawiki.nl

1. Loosen the retaining screws and remove the cross-member and swinging arms (see GROUP 21).

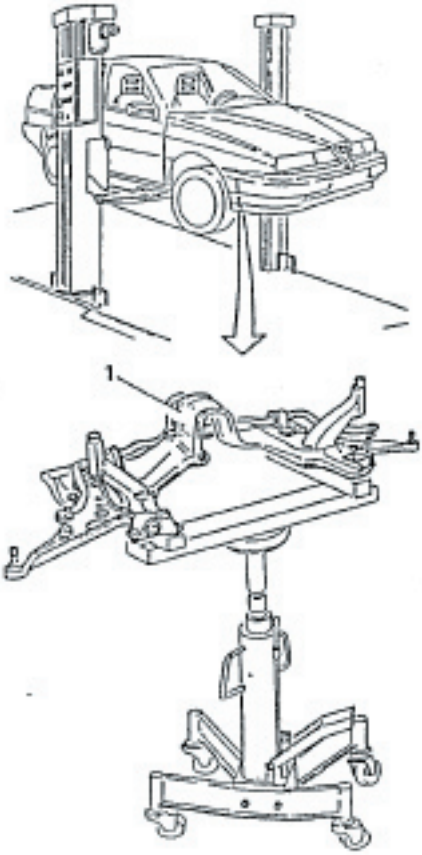

1. Loosen the two lower bolts (fulcrum) securing the air conditioning compressor to the supporting bracket.
2. Loosen the two screws securing the air conditioning compressor slotted bracket to to the supporting bracket.

NOTE: The front screw securing the air conditioning compressor slotted bracket also secures the power steering pump.

3. Move the air conditioning compressor sideways in order to increase the tension of the drive belt.

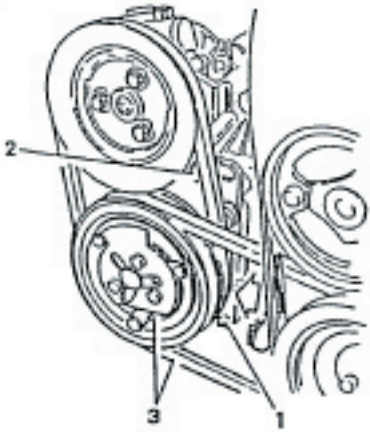

- Tighten the two screws securing the air conditioning compressor and check the tension of the belt.
- If the tension is correct tighten the two lower bolts securing the air conditioning compressor to its support bracket.
- Finish refitting by reversing the procedures followed for disassembly ensuring that the power steering pump drive belt is tensioned correctly (see specific paragraph).

Alfawiki.nl

Substitution

- Place the vehicle on a lift.
- Remove the crossmember (see previous paragraph).

1. Remove the alternator - water pump drive belt (see specific paragraph).
2. Loosen the two lower bolts (fulcrum) securing the air conditioning compressor to the supporting bracket.
3. Loosen the two screws securing the slotted brackets of the air conditioning compressor to the supporting bracket.

NOTE: The front screw of the air conditioning compressor slotted bracket also secured the power steering pump.

4. Remove the air conditioning compressor drive belt.

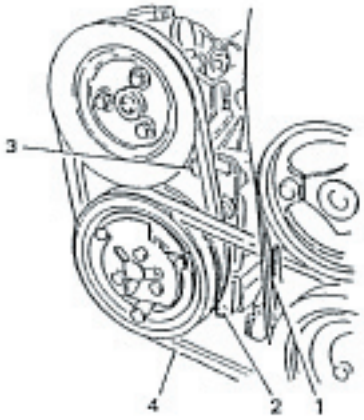

- Fit a new belt by reversing the procedure followed for removal and tension following the instructions given in the previous paragraph.
- Finish the refitting operation by reversing the procedure followed for disassembly ensuring that the power steering pump drive belt and the alternator - water pump drive belts are tensioned correctly (see specific paragraphs).

POWER STEERING PUMP DRIVE BELT

Checking and tensioning

- Place the vehicle on a lift and raise it.

1. Disconnect the two flanges of the front section of the exhaust pipe from the two catalytic converters.

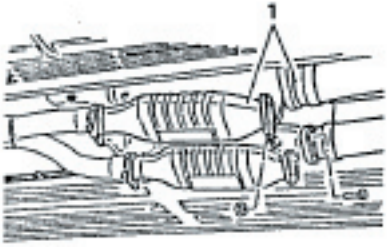

1. Loosen the collars and remove the two catalytic converters.

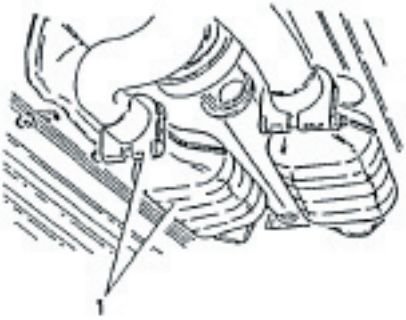

Alfawiki.nl

1. Loosen the screws and the nuts securing the front section of the exhaust pipe to the turbocharger and to the support brackets.
2. Remove the front section of the exhaust pipe.
3. Remove the gasket.

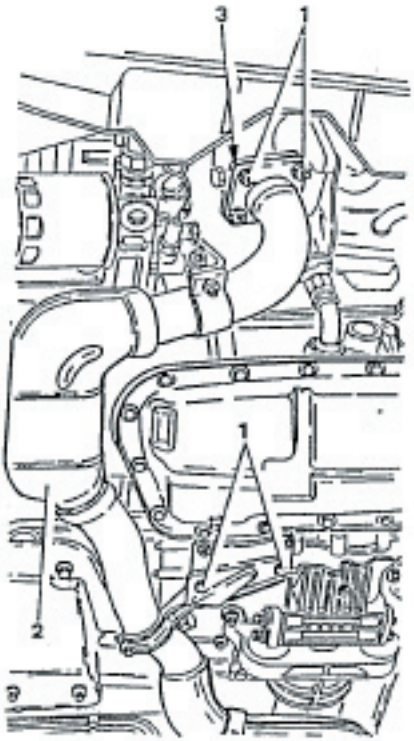

1. Position a suitable column lift under the central section of the differential.
2. Loosen the screws and the bolts securing the rear support of the engine unit and remove it.

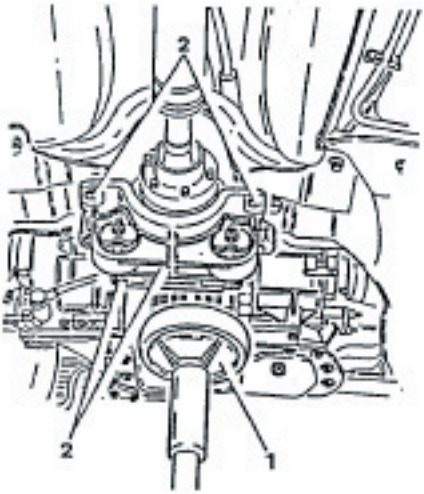

– Slowly remove the column lift.

1. Remove the flexible support supporting the exhaust pipe.
2. Remove the drive shaft safety bracket.

Alfawiki.nl

1. Make reference notches on the flanges of the coupling between the front section of the drive shaft and the central differential and separate them by unscrewing the relative screws.

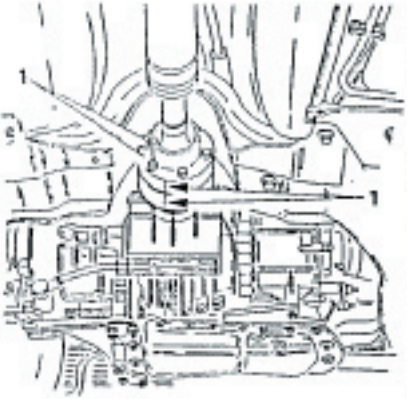

1. Make reference notches on the flanges of the coupling between the front and rear sections of the drive shaft and separate them by unscrewing the relative screws.

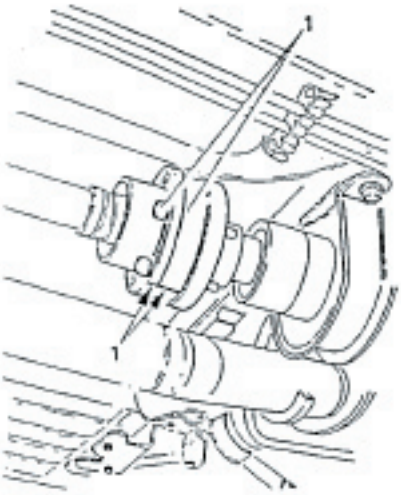

1. Support the front and central sections of the drive shaft using an appropriate tool and after unscrewing the screws securing the central flexible support remove them.

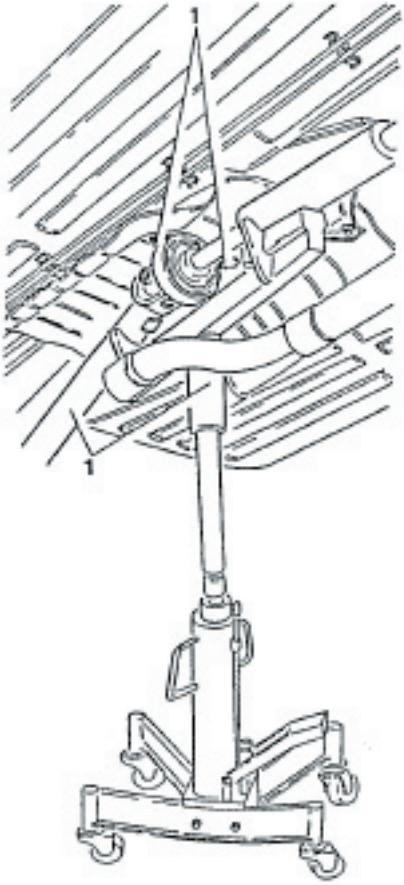

Alfawiki.nl

1. Loosen the retaining screws and remove the cross-member and swinging arms (see GROUP 21).

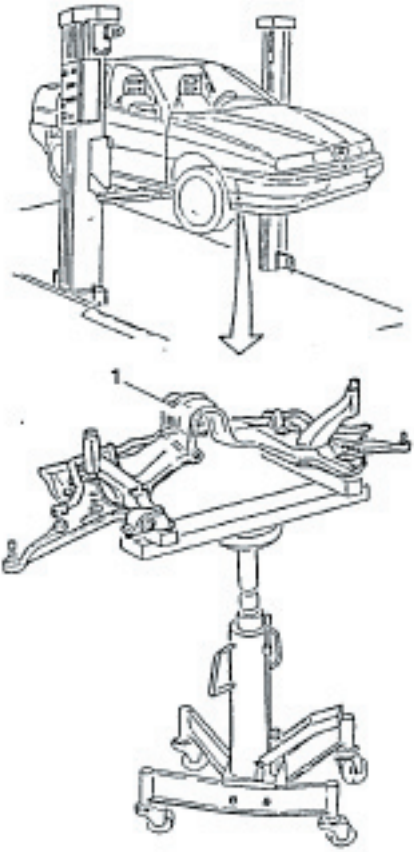

1. Working under the vehicle, measure the tension on the drive belt using N° 1.824.018.000 (C.2.0131), as shown in the illustration.

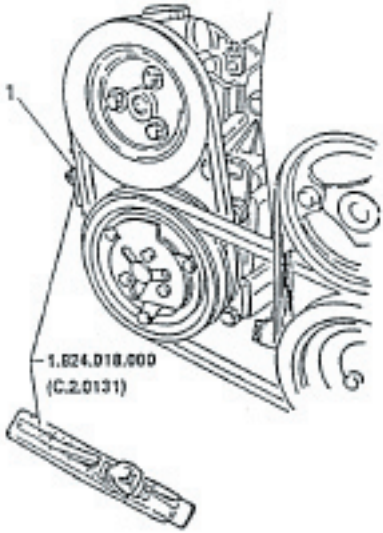

– Check that the tension values detected using the appropriate tool are within the specified limits.

Tension of trapezoidal belt controlling power steering pump	
During installation	500 - 650 N
Minimum	350 N
Re-tensioning	350 - 450 N

Alfawiki.nl

NOTE: The belt can only be re-tensioned as described below after a brief trial period.
- run the engine to normal operating temperature
- switch off the engine and wait until it cools
- re-tension to the specified value.

- If the correct values are not obtained, proceed as follows:

1. Loosen the upper bolt (fulcrum) securing the power steering pump to the supporting bracket.
2. Loosen the lower screw securing the slotted edge of the power steering pump to the supporting bracket.

NOTE: The lower screw securing the power steering pump also secures the air conditioning compressor.

3. Move the power steering pump sideways to increase the tension on the drive belt.

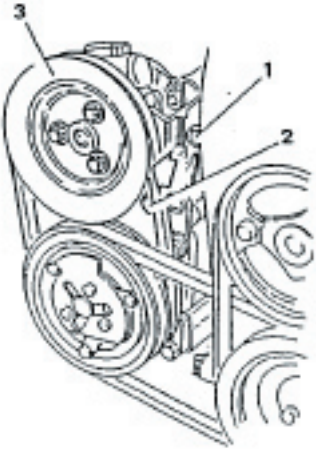

- Tighten the lower screw securing the power steering pump and check the tension of the belt.
- If the tension is correct, also tighten the upper bolt securing the power steering pump to the supporting bracket.
- Complete the refitting operations by reversing the procedures followed for disassembly.

Substitution

- Place the vehicle on a lift.
- Remove the crossmember (see preceding paragraph).

1. Remove the alternator - water pump drive belt (see specific paragraph).
2. Remove air conditioning compressor drive belt (see specific paragraph).
3. Loosen the upper bolt (fulcrum) securing the power steering pump to the supporting bracket.
4. Loosen the lower screw securing the slotted edge of the power steering pump to the supporting bracket.

NOTE: The lower screw securing the power steering pump also secures the air conditioning compressor.

5. Remove the power steering pump drive belt.

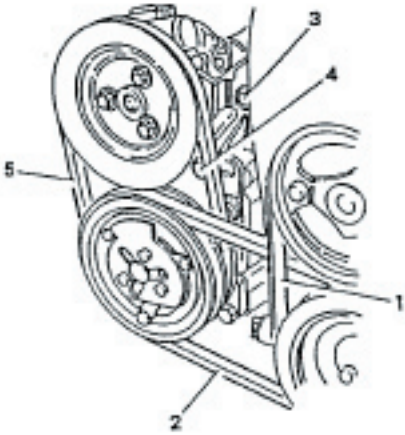

Alfawiki.nl

- Install a new belt by reversing the procedures followed for removal and tension it by following the procedure given in the preceding paragraph.
- Complete the refitting operation by reversing the procedure followed for removal ensuring that the air conditioning compressor drive belt and the the alternator - water pump drive belt is correctly tensioned (see specific paragraphs).

CHECKING PRESSURE AND SEALING OF FUEL CIRCUIT

- Release the pressure in the fuel system as follows:
  - disconnect the fuel pump supply relay
  - run the engine until it cuts out, and then reconnect the relay.
- Disconnect the negative cable from the battery.

CAUTION
Keep a fire extinguisher handy in case of fuel leaks.
Do not smoke.

1. Remove the the engine damping rod.

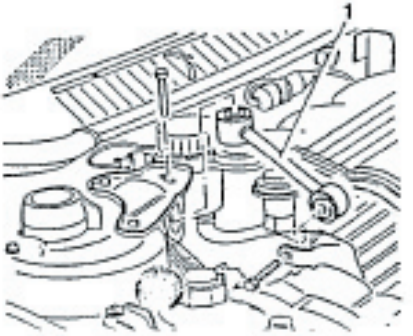

1. Disconnect the fuel delivery hose connection from the fuel-to- electroinjectors distribution manifold.

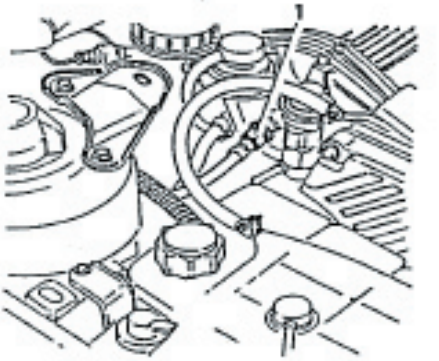

1. Assemble the apparatus for checking the pressure and sealing of the fuel system as shown in the diagram.

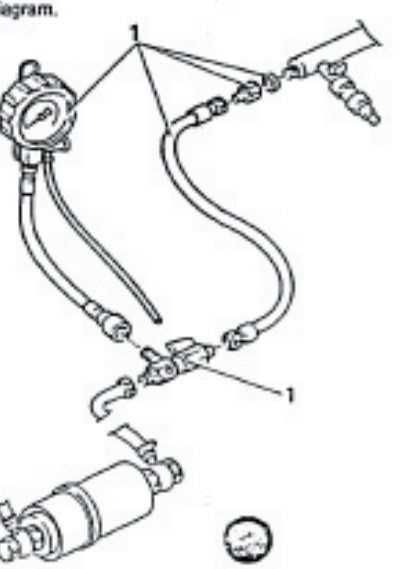

Alfawiki.nl

1. Insert the test equipment as shown in the illustration.

NOTE: The pressure gauge must be between the pressure regulator and the cock.
The pressure gauge must be installed with the greatest care in order to prevent foreign bodies from getting into the circuit.

2. Open the cock on the test apparatus.

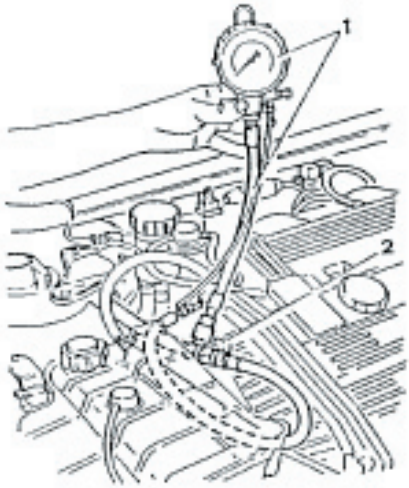

- Reconnect the negative cable of the battery and rotate the ignition key to the MAR position without through starting the engine, so that the fuel pump is activated for a few seconds.

- Repeat this test and check that the fuel pressure is within the specified limits.

Fuel pressure
2.5 ± 0.2 bars (2.55 ± 0.2 kg/cm²)

NOTE: If there are visible leaks or if there is a persistent smell of petrol, carry out the fuel circuit sealing test.

1. When the engine is at idle speed, squeeze the excess fuel return hose just after the pressure regulator and check that the pressure increases to about 4 bars.
Prevent the pressure from exceeding this value.

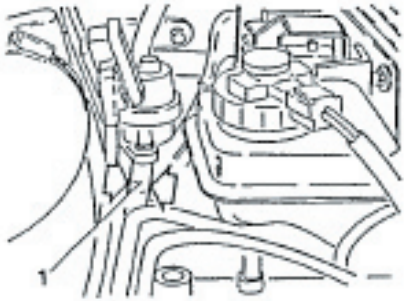

- After the tests have been completed, disassemble the pressure gauge and restore the fuel system connections ensuring that there are no leaks.

Alfawiki.nl

CHECKING SEALING OF THE FUEL VAPOUR RECOVERY SYSTEM

DUE FOR PUBLICATION

REPLACING AIR CLEANER CARTRIDGE

1. Loosen the screws securing the air cleaner cover.

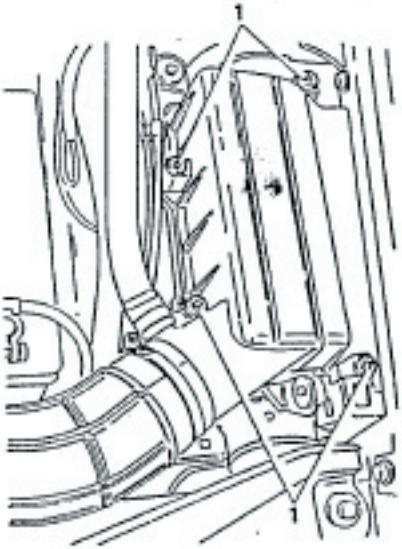

1. Raise the air cleaner cover just enough to permit the removal of the cartridge.

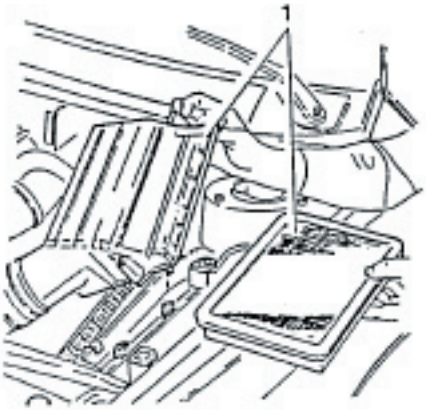

Alfawiki.nl

CAUTION:
Any attempt to clean the cartridge may result in its damage, which would compromise the correct operation of the engine supply system.

- Carefully clean the container of the air cleaner cartridge.
- Position a new cartridge.
- Refit the cover and secure it with the screws.

NOTE: If there are signs of oil, check for possible leaks over the entire air circuit.

CHECKING SEALING OF AIR SUPPLY SYSTEM AND OVER-BOOST VALVE CONTROLCIRCUIT

DUE FOR PUBLICATION

CHECKING SEALING OF BLOW-BY SYSTEM

DUE FOR PUBLICATION

Alfawiki.nl

REPLACING FUEL FILTER

- Place the vehicle on a lift.
- Release the pressure in the fuel delivery system as follows:
  - disconnect the fuel pump supply relay.
  - run the engine until it cuts out.

1. Raise the vehicle.
2. Disconnect the fuel delivery connection from the filter.
3. Disconnect the fuel outlet connection from the filter.

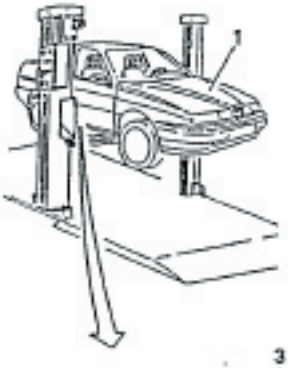

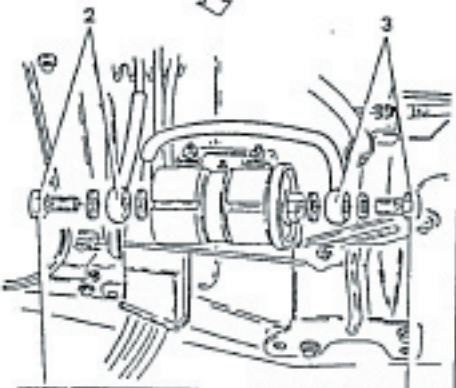

1. Loosen the screw closing the fuel filter support clamp and remove it together with the plastic covering.

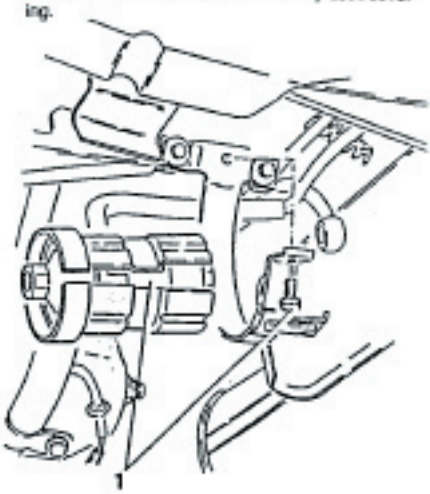

1. Working on a bench, separate the fuel filter from the plastic covering.

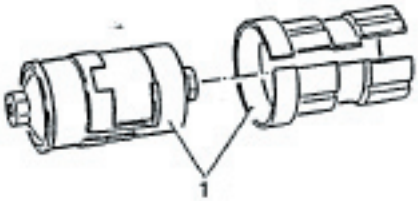

- Refit a new filter by reversing the procedure followed for removal and note the following:
  - replace the copper gaskets of the connections
  - fit the filter so that the arrow printed on it points in the direction of the flow of fuel.

Alfawiki.nl

CHECKING AND REGISTRATION OF IDLE SPEED

NOTE: This test must be carried when the engine is at normal running temperature (i.e. when the electric cooling fan has cut in and then cut out again).
The idle speed must be adjusted when the fan is off. If it cuts during adjustment, interrupt all operations until it is completely still again.

- Connect the engine to a rev counter.

1. Disconnect the electrical connection from the constant idle speed actuator.

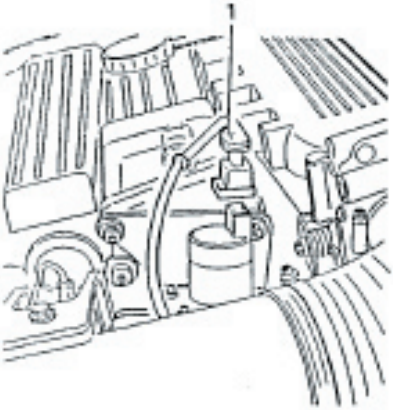

- Check that the idle speed is within the specified values.

Idle speed
850 ± 30 r.p.m.

- If the idle speed is not within the specified limits, proceed as follows:

1. Loosen the by-pass valve counter nut on the throttle body.
2. Acting on the by-pass screw, adjust the idle speed until it reaches the specified value.

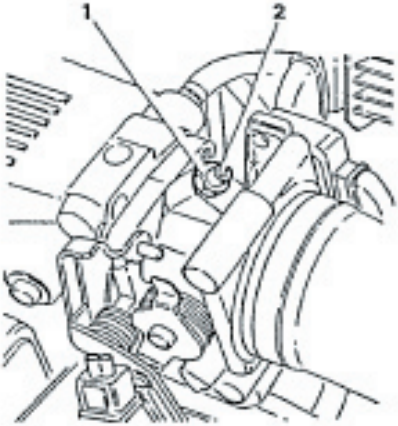

- Connect the previously disconnected electrical connection to the constant idle speed actuator and check that the idle speed is within the specified limits.

Idle speed
850 ± 30 r.p.m.

CHECKING OPERATION OF THE LAMBDA PROBE

See ELECTRICAL - ELECTRONIC DIAGNOSIS manual.

Alfawiki.nl

CHECKING EXHAUST EMISSIONS

CAUTION:
The exhaust emissions must be checked in the open or where this is not possible, in a suitable environment equipped in accordance with the current safety laws.

NOTE: **This test must be carried when the engine is at normal running temperature (i.e. when the electric cooling fan has cut in and then cut out again.**
If the idle speed is not within the specified limits, check that the constant idle speed actuator is functioning correctly.

Downstream of the catalytic converters

- Check that the oil is at the correct level and that the air cleaner cartridge is clean.
- Start the engine and run it at idle speed.

1. Insert the probe of the analyzer into the end of the exhaust pipe and check that the percentage of CO and the quantity of unburnt hydrocarbons (HC) are within the specified limits.

Idle speed		850 ± 30 r.p.m.
Exhaust CO	% vol.	≤ 0.35
Exhaust HC	p.p.m.	≤ 90

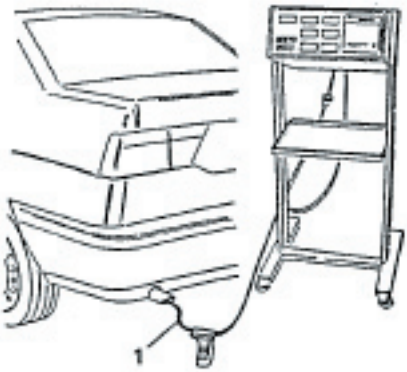

- If the test results in values which are not within the specified limits, make the necessary adjustments by using a screwdriver to move the trimmer after removing the the sealed cap with an appropriate tool.

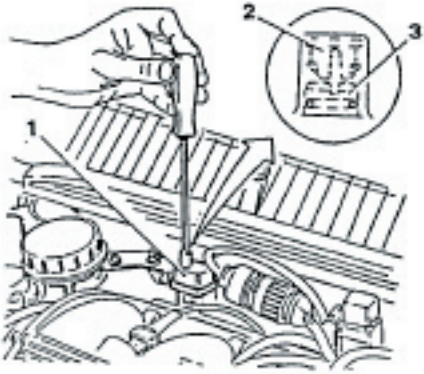

1. *Idle CO trimmer*
2. *Sealed cap*
3. *Regulation screw*

- When the adjustment has been made, check that the idle speed has not been altered and if it has, restore it to its original value by moving the by-pass screw on the throttle body.
  Check that the CO and HC values have not been altered.

Alfawiki.nl

Upstream of the catalytic converters

- Check that the oil is at the correct level and that the air cleaner cartridge is clean.
- Start the engine and run it to idle speed.

1. Disconnect the electrical connections from the lambda probe.

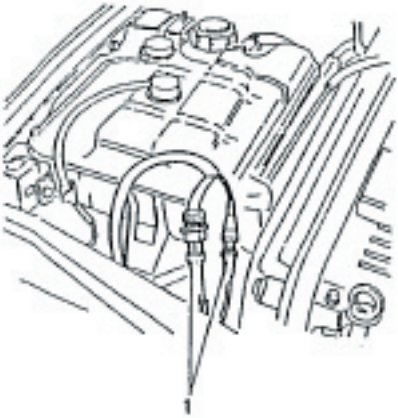

1. Disconnect the electrical connection from the constant idle speed actuator and check that the idle speed is within the specified limits.

Idle speed	850 ± 30 r.p.m.

1. Insert the probe of the exhaust gas analyzer into the socket in front of the catalyzers and check that the percentage of CO is within the specified limits.

CO upstream of the catalyzers	% vol.	0.4 - 0.8

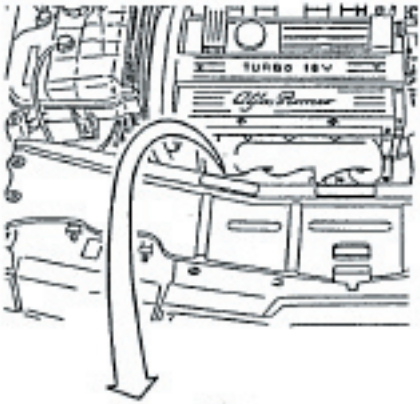

- If the test results on values which are not within the specified limits, make the necessary adjustment by using a screwdriver on the trimmer after removing the sealed cap with the appropriate tool.

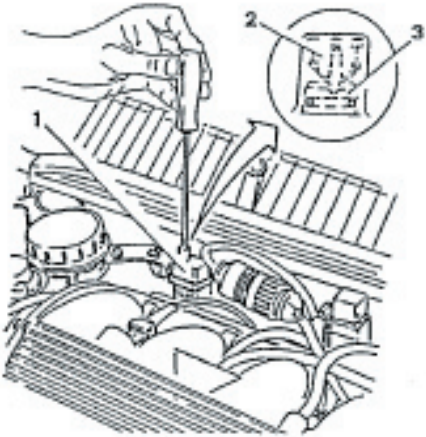

1. *Idle CO trimmer*
2. *Sealed cap*
3. *Regulation screw*

- When the adjustment has been made, check that the idle speed has not been altered and if it has, restore it to its original value by moving the by-pass screw on the throttle body.
  Check that the CO value has not been altered.

CHECKING IGNITION ADVANCE

- Place the vehicle on a lift and remove the front right-hand wheel and relative dust-guard.
- Connect a strobe gun to the high voltage cable of the cylinder N° 1 spark plug.
  Connect the po[illegible] and cables of the strobe gun to the relative term[illegible] on the battery.

1. Start the engine and warm it to normal running temperature and, at idle speed (850 ± 30 r.p.m.), check that the notches on the auxiliary organs control pulley is in line with that on the timing belt cover. Check that the advance is within the specified limits as shown below.

Fixed advance
10° ± 3°

NOTE: **Using a strobe gun which is suitable for ignition systems of the "lost spark" type, the value read off the instrument corresponds to the actual value.**
If a "traditional" strobe gun is used instead, the value read off the instrument will be halved as a spark is produced at each revolution of the engine.

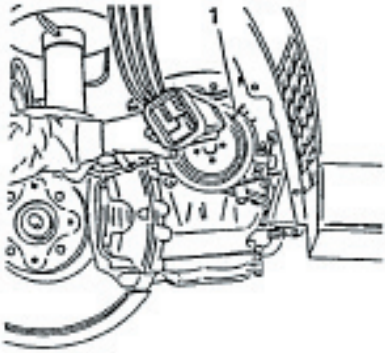

CAUTION:
The system will not permit and does not require any adjustment of the ignition advance.
If the advance values a[illegible] correct, refer to ELECTRICAL - ELECTR[illegible] DIAGNOSIS.

Alfawiki.nl

CHECKING AND REPLACING SPARK PLUGS

The spark plugs fitted as standard to this vehicle are of the superficial discharge type with three peripheral earth electrodes and a single central electrode.
The distance between the electrodes on this type of spark plug does not require adjustment.

Firing order	1 - 3 - 4 - 2

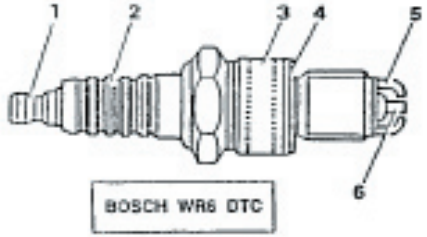

1. *Terminal*
2. *Ceramic insulation*
3. *Body*
4. *Gasket*
5. *Central electrode*
6. *Peripheral earth electrodes*

MAINTENANCE

Periodically check the state of the electrodes to see if they are worn or broken and if the ceramic insulation is intact. If there is any sign of damage, replace the spark plugs.

During installation lubricate the thread with engine oil and tighten the spark plugs to a torque of:

23 - 28.4 Nm (2.3 ÷ 2.9 kgm)

CAUTION:
Do not use spark plugs which are of a different size or with different characteristics from the specified type as this may cause serious damage to the engine and alter the level of toxic exhaust fumes.

CAUTION:
A dirty or burnt out spark plug is often symptomatic of a malfunction in the engine's supply system.
For example:
- traces of carbon powder: incorrect mixture, air cleaner very dirty
- oil stains: infiltrations of oil from the piston rings
- ash build-up: presence of aluminium material especially in oil
- melted electrodes: overheating due to unsuitable combustion, valve defects
- Fast-wearing electrodes: damaging additives present in the fuel or oil, pinging, overheating
For greater detail regarding these problems, refer to the fault diagnoses in GROUPS 01 and 04.

Alfawiki.nl

TESTING THE SEAL ON THE ENGINE COOLING SYSTEM PRESSURIZED CAP

1. Screw the connection onto the lower end of the seal test instrument.
2. Fit the pressurized cap of the expansion tank onto the connection.
3. Pressurize the piston manually and check that the release valve opens at the correct pressure which can be read off the instrument.

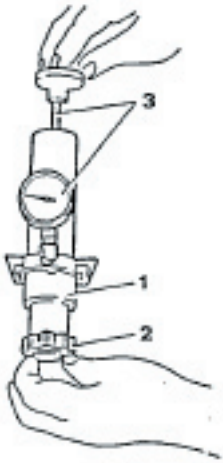

Pressure setting of pressurized cap
0.98 ± 0.1 bar (1 ± 0.1 kg/cm²)

CHECKING THE SEALING OF THE ENGINE COOLING SYSTEM

- Loosen and remove the pressurized cap from the expansion tank.

1. Screw the connection of the test instrument onto the neck of the expansion tank.
2. Pressurize the system manually and check that the pressure is maintained at the specified level. If the pressure varies, check that there are no leaks in the sleeves or radiator.

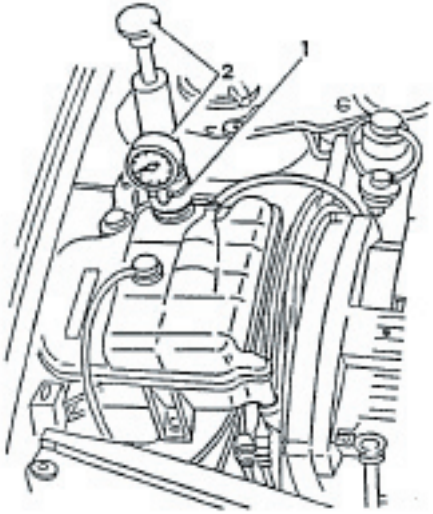

Hydraulic system control pressure
1.08 bar (1.1 kg/cm²)

CAUTION:
For safety reasons the pressure during these tests using the test instrument must not exceed 1.38 bars (1.4 kg/cm²).

Alfawiki.nl

CHECKING LEVEL AND REPLACING ENGINE COOLANT

Check

1. When the engine is cold, visually check that the level of the engine coolant reaches the arrow on the expansion tank. If not, top-up the system with the specified fluid.

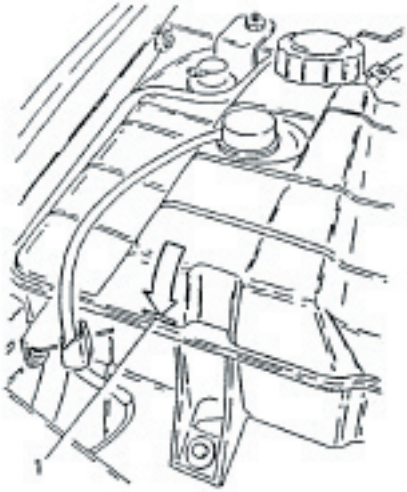

Substitution

- Place the vehicle on a lift.
1. Loosen and remove the cap from the expansion tank.

CAUTION:
Never remove the cap from the expansion tank when the engine is warm!

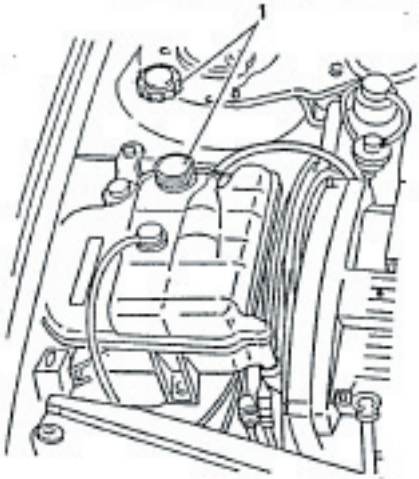

- Raise the vehicle on a lift.
1. Loosen the clamp securing the sleeve carrying engine coolant away from the radiator and disconnect the sleeve. Drain off the engine coolant into a suitable container placed under the vehicle.

CAUTION:
The antifreeze mixture used as an engine coolant will damage paintwork. Prevent it from coming into contact with painted surfaces.

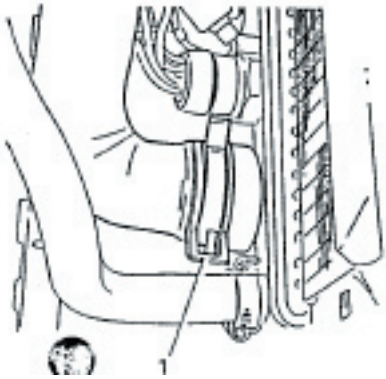

Alfawiki.nl

1. Reconnect the sleeve to the radiator and any hoses which were previously disconnected. Check that all the clamps are tight.

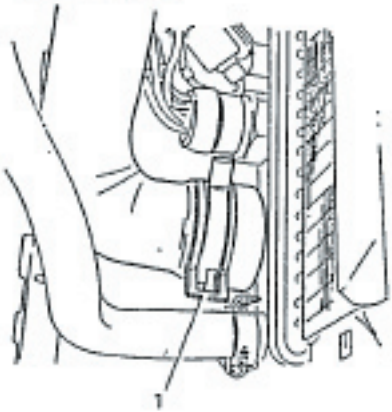

1. Refill the system up to the reference mark on the expansion tank.

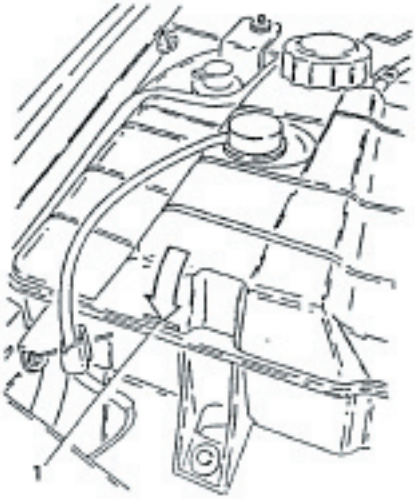

- The recommended quantity and quality of the engine coolant is given in the following table.

Minimum temperature: -40°C		
Concentrated antifreeze	Alfa Romeo Antifreeze	5.0 Litres (55%)
Distilled water		4.1 Litres (45%)
Ready-for-antifreeze use	Alfa Romeo Climafluid Permanent -40°C	9.1 Litres

- Start the engine and warm it to normal running temperature until the thermostat frees the residual air trapped in the system.
- When the engine is cold, top-up the system to the level indicated on the expansion tank.
- Screw the pressurized cap back on.

CAUTION:
It is unadvisable to mix different types of antifreeze!
Do not use rust-proofing additives as they may not be compatible with the antifreeze!

Alfawiki.nl

MAINTENANCE OF MECHANICAL UNITS

CHECKING FOR DAMAGE OF THE HALF-SHAFTS, POWER STEERING BELLOWS, STEERING KNUCKLE COVERS AND DRIVE SHAFT.

DRIVE HALF-SHAFTS

NOTE: **Check the front and rear half-shafts.**

1. Check that the rubber boots are not damaged and that grease is not seeping from them.
   Overhaul the entire joint if any breakage is discovered as foreign matter may have penetrated which would result in serious malfunctions.
2. Visually check the condition of the constant speed joints.

– If necessary, overhaul the components, see: REPAIR INSTRUCTIONS - MECHANICAL UNITS - GROUP 17.

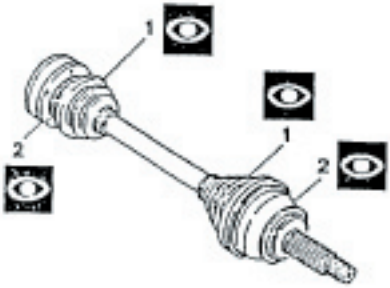

STEERING ROD

1. Ensure that the protective boots are not damaged. Replace them if they show signs of cracking or cuts.
2. Check that the spherical joints are not damaged or worn.

– If necessary, replace the components, see: REPAIR INSTRUCTIONS - MECHANICAL UNITS - GROUP 23.

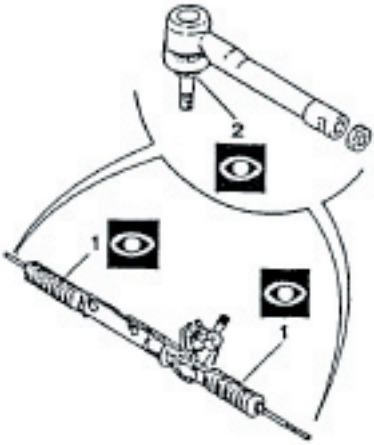

Alfawiki.nl

DRIVE SHAFT

1. Check the drive shaft safety support and fittings for damage.
2. Ensure that the joints and flanges securing the shaft to the differential are not damaged.
3. Check that no oil or grease is leaking from the cross of the cardan joint or from the differentials.

- If necessary, overhaul the damaged components, see: REPAIR INSTRUCTIONS - MECHANICAL UNITS - GROUP 15.

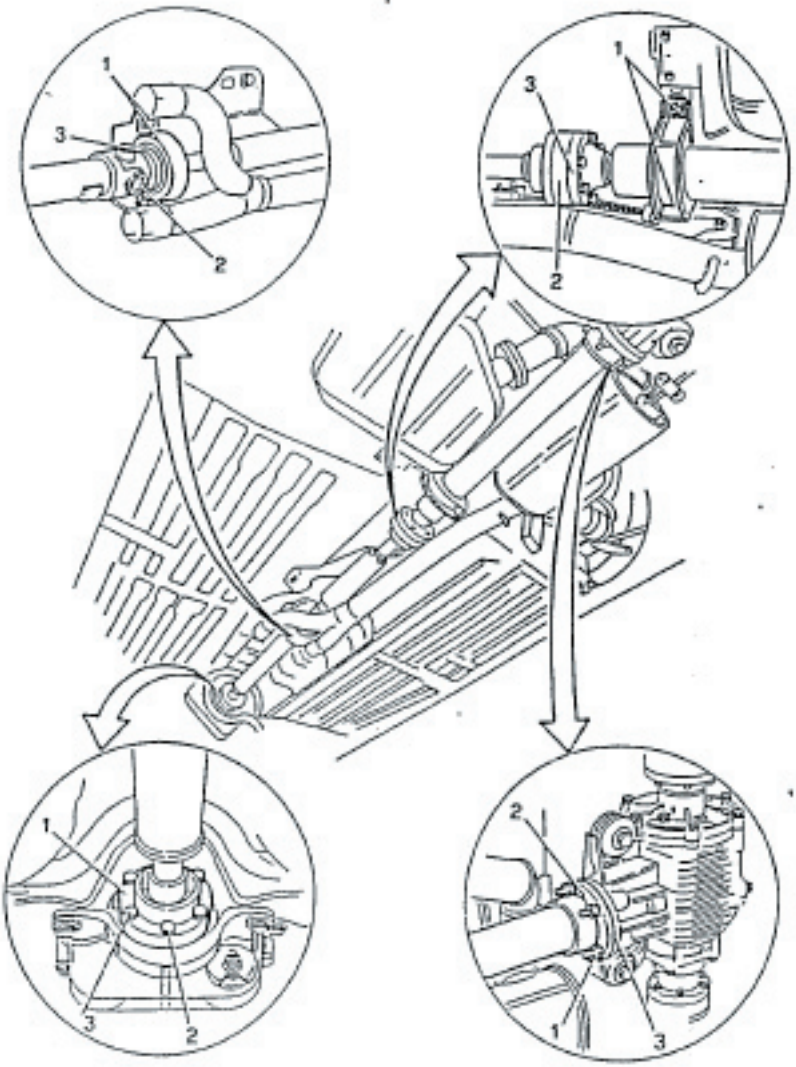

Alfawiki.nl

CHECKING SEALING OF BRAKING SYSTEM

1. Check piped and hoses; they must not be damaged or show signs of swelling or corrosion. Also check that they are installed correctly.
2. Check the connections; there must be no leaks. If necessary tighten to the correct torque.
3. Check that the servo-brake vacuum intake hose is correctly installed and not cracked or pinched.

- Replace any damaged parts and bleed the system (see: REPAIR INSTRUCTIONS - MECHANICAL UNITS - GROUP 22).

CAUTION:
Clutch/brake fluid will damage paintwork and should be handled with care.

NOTE: The brake system must be bled if any part is disassembled or replaced (see: GROUP 22).

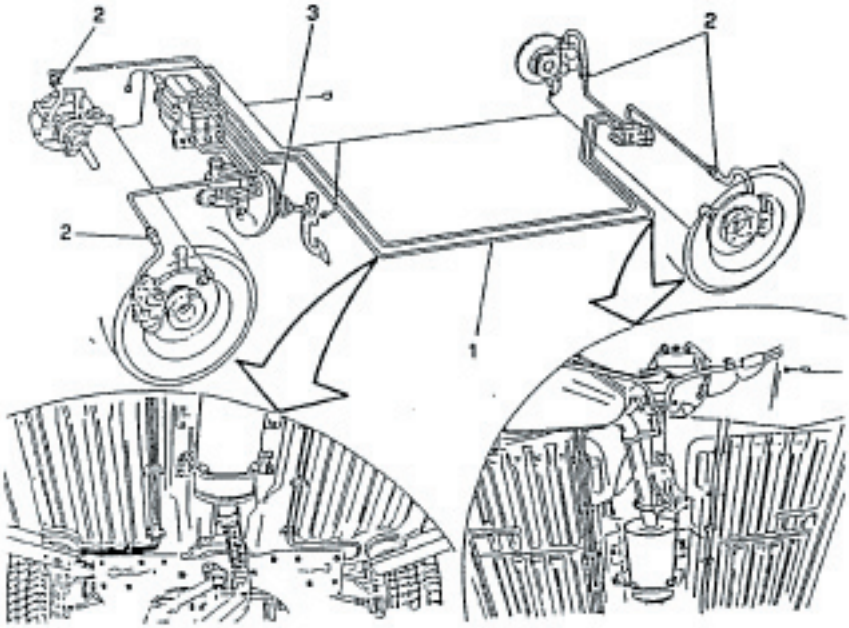

Alfawiki.nl

CHECKING LEVEL OF CLUTCH/BRAKE FLUID

WARNING:
Ensure that the fluid does not come into contact with the paintwork.

NOTE: When checking the clutch/brake fluid, the vehicle must be resting on a level surface.

1. Remove the cap from the brake/clutch fluid reservoir.
2. Ensure that the fluid reaches the MAX mark.
3. If necessary fill the reservoir with the specified fluid.

– If the level is very low, carefully check the system for leaks.

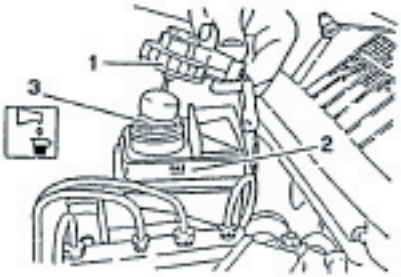

WARNING:
The clutch/brake fluid is hygroscopic and quickly absorbs water when in contact with humid environments.
Top-up with fluid contained in sealed cans which should not be opened until they are ready to be used.

NOTE: The braking system must be bled if any part is disassembled or replaced (see: REPAIR INSTRUCTIONS - MECHANICAL UNITS - GROUP 22).

CHECKING HANDBRAKE TRAVEL

1. Raise the handbrake to the third detent on the sector gear and check that the wheels are locked.
2. If they are not locked, tighten the regulation nut until they are.

– Applying a force of approximately 40 kg to the control lever, check that the number of detents does not exceed 7.

– Ensure that when the handbrake is disengaged the wheels rotate freely.

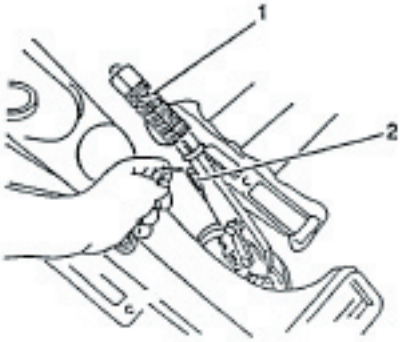

Alfawiki.nl

CHECKING POWER STEERING FLUID

NOTE: **The following operations should be carried out when the vehicle is on a level surface.**

1. Check that the level reaches the maximum mark on the reservoir.
2. If it does not, unscrew and remove the filler cap and top-up with the specified oil.

– Start the engine and wait until it is running smoothly, rotate the steering wheel a number of times from left lock to right lock.
– Top-up the system to the MAX mark and screw on the cap.

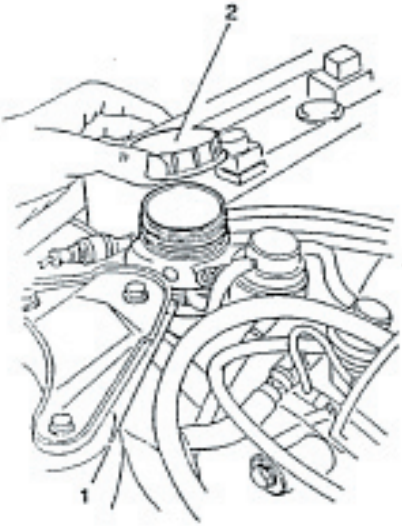

CHECKING LEVEL AND REPLACING GEARBOX AND FRONT DIFFERENTIALS OIL

NOTE: **This check should be performed when the vehicle is on a level surface and on a vehicle lift.**

1. Check the gearbox-differentials oil level using the dipstick with the red eyelet which can be found in the engine compartment under the brake/clutch fluid reservoir.

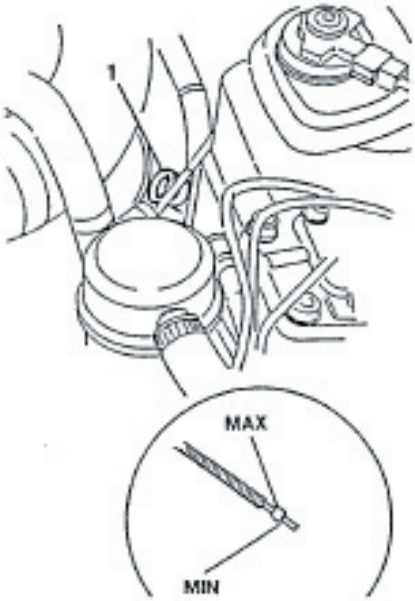

Alfawiki.nl

1. If necessary top-up the system by unscrewing the filler cap located on the upper part of the gearbox and using a suitable pump, refill the circuit with the specified oil.

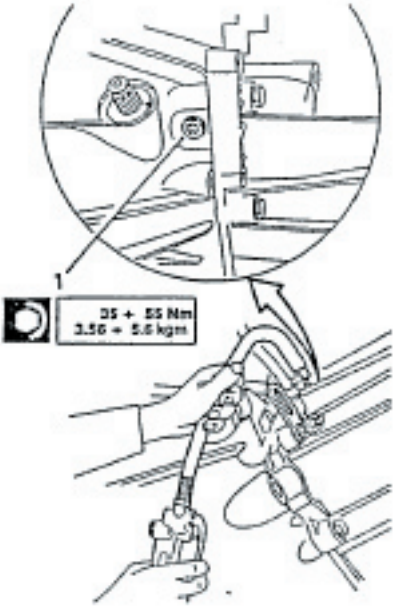

- When replacing the oil, place a suitable container under the vehicle and proceed as described below.
1. Unscrew the drain screw located on the gearbox bell and allow the oil to drain off for at least 15 minutes.
2. Unscrew the connection located on the distributor between the distributor connection hose - and front differential and allow the oil to drain off for at least 15 minutes.
- Clean the cap and the connection and tighten to the specified torque.

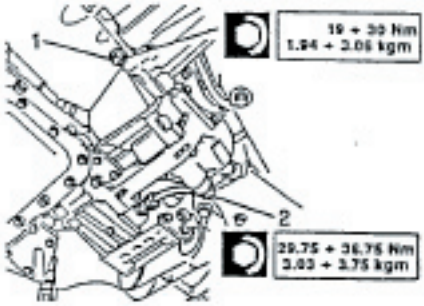

1. Unscrew the filler cap located on the upper part of the gearbox and using a suitable pump, refill the system with the specified oil (see: TECHNICAL CHARACTERISTICS AND SPECIFICATIONS - REFILLING FLUIDS AND LUBRICANTS), and tighten the filler cap to the correct torque.

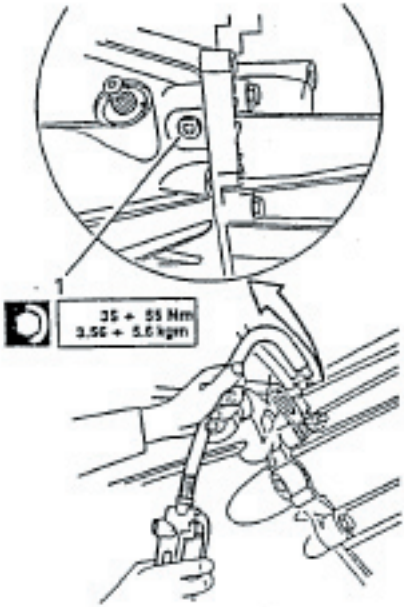

Alfawiki.nl

CHECKING AND REPLACING REAR DIFFERENTIAL OIL

NOTE: The rear differential oil must be checked or replaced when the vehicle is on a lift and perfectly level.

1. When checking the rear differential oil level, unscrew the oil filler cap and check that the oil comes up to the lower edge of the hole.
- Top-up with the specified oil through the filler hole and then clean the cap an tighten it to the correct torque.
2. When replacing the oil in the rear differential, place a suitable container under the vehicle, remove the drain screw and allow the oil to drain off for at least 15 minutes.
- Clean the drain screw, screw it back on and refill with the specified oil through the hole until it reaches the lower edge. Clean the cap and tighten it to the correct torque.

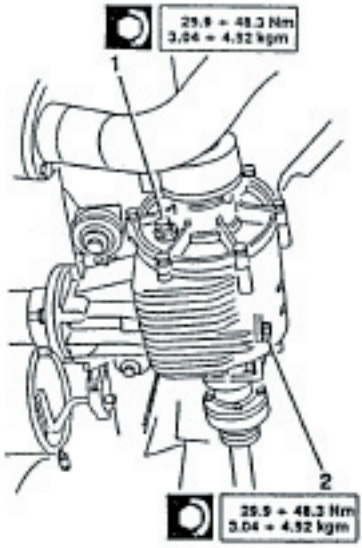

Alfawiki.nl

LUBRICATING THE DOOR, BONNET AND BOOT HINGES AND THE BONNETS/BOOTS CATCHES DEVICES

Apply a suitable amount of grease to the parts indicated below to prevent wear and corrosion.

- Clean the affected parts.
- Grease.
- Remove excess grease.

DOORS

1. Lubricate the hinges, check strap and the door locks.

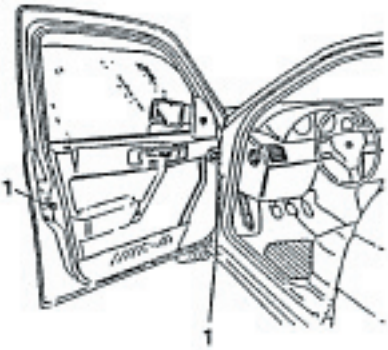

BONNET

1. Lubricate the the catches and the bonnet release cable.

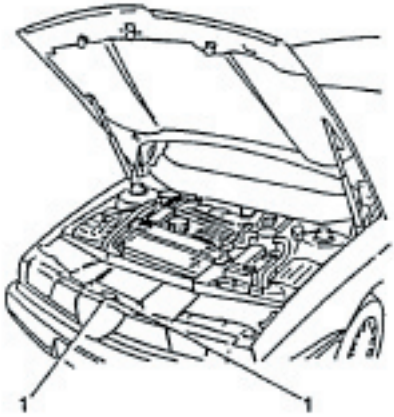

BOOT

1. Lubricate the boot catch.

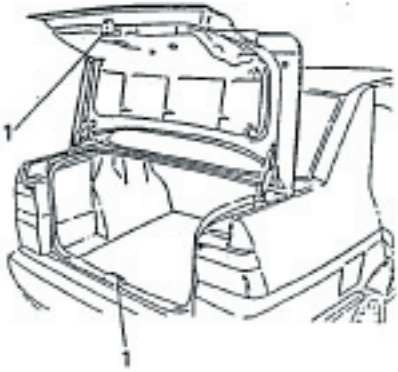

Alfawiki.nl

TECHNICAL CHARACTERISTICS AND SPECIFICATIONS

BELT TENSIONING

Tension \ Belt	Alternator Water pump	Air conditioning compressor	Pump power steering
Upon refitting	520 - 670 N	500 -650 N	500 - 650 N
Minimum	300 N	350 N	350 N
Re-tensioning	300-450 N	350-450 N	350- 450 N

VALVE CLEARANCE

NOTE: Check/adjust valve clearance only when the engine is cold.

Valve clearance	Intake	0.36 - 0.44 mm
	Exhaust	0.46 - 0.54 mm

CHECKING FUEL SUPPLY PRESSURE

Fuel pressure	2.5 ± 0.2 bar (2.55 ± 0.2 kg/cm^2)
Maximum control pressure	4 bar

Alfawiki.nl

CHECKING IDLE SPEED

Idle speed	850 ± 30 r.p.m.

CHECKING EXHAUST EMISSIONS

CO	% vol.	At end of exhaust pipe	≤ 0.35
		Upstream of catalyzers	0.4 ÷ 0.8
HC	p.p.m.	At end of exhaust pipe	≤ 90

IGNITION

Spark plugs	BOSCH WR6 DTC
Firing order	1-3-4-2
Fixed advance (at idle speed)	10° ± 3°

COOLING SYSTEM

Control pressure of hydraulic circuit	1.08 bar (1.1 kg/cm^2)
Pressure setting of pressurized cap	0.98 ± 0.1 bar (1 ± 0.1 kg/cm^2)

HANDBRAKE

LEVER

Number of detents of the handbrake lever before the rear wheels lock: 3

Alfawiki.nl

FILLING WITH FLUIDS AND LUBRICANTS

See "FLUIDS AND LUBRICANTS" PAGE 00-15 and "APPROXIMATE SERVICING CAPACITIES" page 00-18.

Alfawiki.nl

TIGHTENING TORQUES

ENGINE

Part	Nm	kgm
Oil sump drain plug	32.5 ÷ 52.5	3.3 ÷ 5.4
Spark plugs	23 ÷ 28.4	2.3 ÷ 2.9
Water pump pulley fastening screw	21.3 ÷ 26.3	2.2 ÷ 2.7
Nut fastening timing belt guide pulley	37.4 ÷ 46.2	3.8 ÷ 4.7
Nut fastening counter-rotating shafts belt guide pulley	19.5 ÷ 24.2	2.0 ÷ 2.5
Fuel inlet union in filter	30 ÷ 37	3.1 ÷ 3.8
Fuel outlet union from filter	21 ÷ 26	2.1 ÷ 2.7

GEARBOX AND DIFFERENTIAL

Part	Nm	kgm
Threaded cap for filling gearbox oil	35 ÷ 55	3.56 ÷ 5.6
Magnetic plug on gearbox for draining oil	19 ÷ 30	1.94 ÷ 3.06
Union for swivel fitting fastening oil delivery pipe to bevel pinion support	29.75 ÷ 36.75	3.03 ÷ 3.75

REAR DIFFERENTIAL

Part	Nm	kgm
Threaded oil filler cap	29.9 ÷ 48.3	3.04 ÷ 4.92
Threaded oil drain cap	29.9 ÷ 48.3	3.04 ÷ 4.92

Alfawiki.nl

BRAKING SYSTEM

Part	Nm	kgm
Connection for pipe on brake pump	15.3 - 18.9	1.55 - 1.93
Drain screw on brake calipers	3.71 - 5.9	0.38- 0.61
Connection for hose connection on brake calipers	15.3 - 18.9	1.55 -1.93
Connection for pipe connection of braking manifold	9.35 - 11.55	0.95 - 1.18

SPECIFIC TOOLS

1.820.260.000	Tip for tensioning counter-shaft belt
1.820.261.000	Valve cap attachment
1.820.262.000	Lever for replacing pads
1.820.263.000	Rear engine support support
1.824.015.000 (C.2.0128)	Tool for checking tension of belts
1.824.016.000 (C.2.0129)	Rod for tensioning timing belts and counter-shafts
1.824.017.000 (C.2.0130)	Tip for tensioning timing belt
1.824.018.000 (C.2.0131)	Tool for checking belt tension

Alfawiki.nl

155 TD

REPAIR MANUAL

VEHICLE CHARACTERISTICS AND MAINTENANCE

Alfa Romeo

Alfawiki.nl

GROUP 00

VEHICLE CHARACTERISTICS AND MAINTENANCE

INDEX

DIMENSIONS ..... 00 - 3
WEIGHTS AND LOADS ..... 00 - 4
WHEELS AND TYRES ..... 00 - 5
MODEL IDENTIFICATION ..... 00 - 6
– Identification labels ..... 00 - 6
– Identification table ..... 00 - 7
– Label containing identification data ..... 00 - 8
– Paint identification label ..... 00 - 8
SPECIFIC TOOLS ..... 00 - 9
LIFTING AND TOWING POINTS ..... 00 - 9
MAINTENANCE OPERATIONS 00-11
– Scheduled checks and maintenance 00-14
FLUIDS AND LUBRICANTS 00-15
APPROXIMATE REFILL CAPACITIES 00-16
ENGINE MAINTENANCE OPERATIONS 00-17
– Replacement of engine oil and filter 00-17
– Checking and adjusting valve clearance 00-19
– Replacement of timing belt 00-20
– Auxiliary part belts 00-26
- Air conditioning compressor drive belt 00-26
- Alternator - water pump drive belt 00-29
- Power steering pump drive belt 00-31
– Check or replacement of air filter 00-32
– Checkexhaust smoke level 00-33
– Test sealing of engine coolant system pressurized cap 00-34

Alfawiki.nl

– Sealing test on engine cooling system 00-34
– Checking level and replacing engine coolant 00-35

MAINTENANCE OF MECHANICAL UNITS 00-38
– Tightening torques 00-38
- Gearbox and differential 00-38

TECHNICAL CHARACTERISTICS AND SPECIFICATIONS 00-39
– Belt tensioning 00-39
– Valve clearance 00-39
– Check smoke level at exhaust 00-39
– Cooling system 00-39
– Tightening torques 00-40

SPECIFIC TOOLS 00-40

Alfawiki.nl

DIMENSIONS

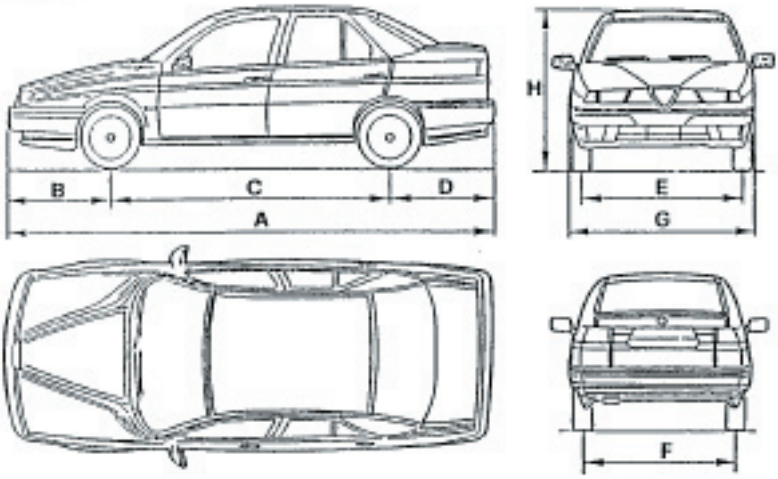

Dimensions \ Version			155 TD
A	Maximum lenght	mm	4443
B	Front projection	mm	960
C	Wheel base	mm	2540
D	Rear projection	mm	943
E	Front wheel track	mm	1469
F	Rear wheel track	mm	1402
G	Maximum width	mm	1700
H	Maximum height	mm	1440

Alfawiki.nl

WEIGHTS AND LOADS

Weights and loads \ Version			155 TD
Kerb weight (DIN)		kg	1290
Vehicle weight when fully loaded		kg	(*)
Useful load		kg	(*)
Maximum permitted weight per axle	front	kg	(*)
	rear	kg	(*)
Towable weight	with trailer with brakes	kg	(*)
	with trailer without brakes	kg	(*)
Maximum loading on tow hook		kg	(*)

(*) Data not available at time of going to press.

Alfawiki.nl

WHEELS AND TYRES

Characteristics \ Version		155 TD
Rim size		6J x 14"
Tyre dimensions	standard	175/65 R14" 82T
	optional	—
Tyre pressure bar - kg/cm²	average load, normal speed	front 2.2 rear 2.0
	full load, high speed	front 2.5 rear 2.5
Compact spare wheel	rim size	4J x 15"
	tyre dimensions	115/70 R15" 90M
	tyre pressure bar - kg/cm²	4.2

Alfawiki.nl

MODEL IDENTIFICATION

IDENTIFICATION LABELS

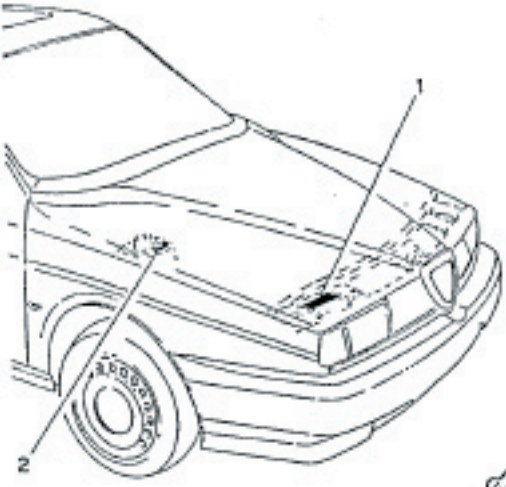

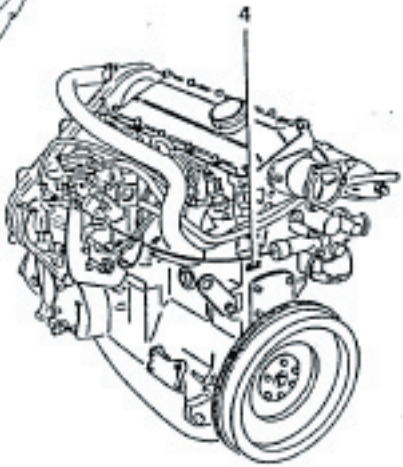

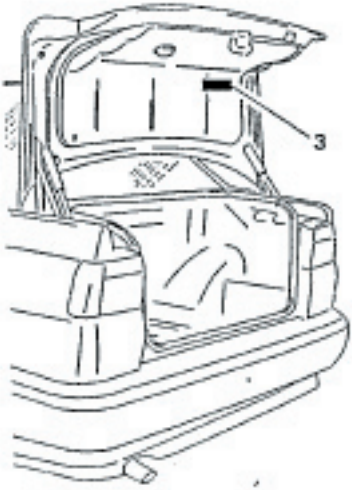

1. *Label containing identification data*
2. *Body label*
3. *Paint identification label*
4. *Engine label*

Alfawiki.nl

IDENTIFICATION TABLE

Version		155 TD
Type		4 door saloon
Drive		LH + RH
N° Vehicle Type	on identification label	(*)
	in engine compartment to one side of the upper attachment of right-hand shock absorber	(*)
Progressive chassis N°		0.000.000.1
Progressive type and engine N°		AR 67502 from 000.001

(*) Data not available at time of going to press.

Alfawiki.nl

LABEL CONTAINING IDENTIFICATION DATA

This is located on the engine compartment crossmember.
It contains the identification data listed to the right:

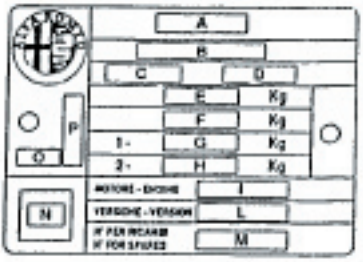

A. Manufacturer
B. Homologation number
C. Vehicle identification code
D. Chassis serial number
E. Max. gross vehicle weight
F. Max. gross weight including trailer
G. Max. gross weight on front axle
H. Max. gross weight on rear axle
I. Engine code
L. Chassis code
M. Number for spare parts
N. Smoke opacity index (for Diesel and Turbodiesel engines)
O. Supplier code
P. Foreign manufacturer

PAINT IDENTIFICATION LABEL

This is located on the inner part of the luggage compartment and contains the data to the right:

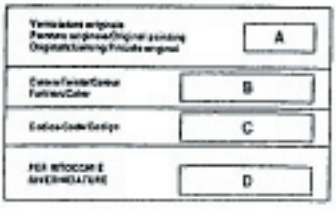

A. Paint manufacturer
B. Colour name
C. Colour code
D. Respray and touch-up code

Alfawiki.nl

SPECIFIC TOOLS

The specific tools plays a very important role in the maintenance of the vehicle as they are able to guarantee an accurate, rapid and reliable service.
It should be noted that the length of the various operations has been calculated assuming that the specific tools be used.
This manual lists and illustrates the special tools designed by the manufacturer to carry out the overhaul and maintenance activites of the vehicle.
The tool identification code is formed by a new 10 figure number and an old 1 letter and 5 figure number.

Eg.: 1.820.012.000
(A.2.0195)

The recently constructed tools have only the new number.
The assistance network can supply particular specific tools through each Alfa Romeo dealer following procedures which already exist.

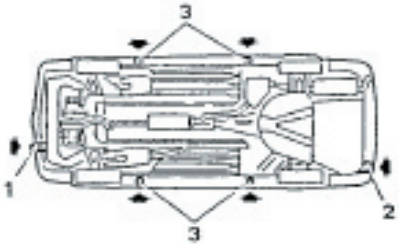

LIFTING AND TOWING POINTS

- If it is necessary to raise the vehicle, position the jacks in the points indicated in the figure.

CAUTION:
After the vehicle has been raised on the jacks, it must be supported by suitable safety stands.
Before lifting the rear (front) end of the vehicle, lock the wheels by placing chocks in front (behind) the front (rear) wheels.

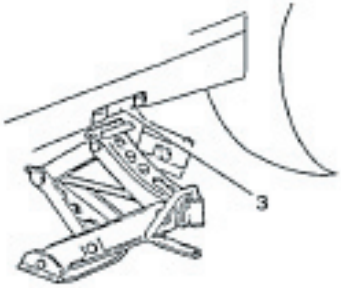

1. *Front tow hook*
2. *Rear tow hook*
3. *Jack socket*

Alfawiki.nl

The vehicle is equipped with two two hooks (front and rear) located on the righthand side of the bumper bars. When towing the vehicle, drive with care and respect all current laws.

Before towing, the ignition key of the vehicle to be towed should be turned to the RUN position and then to the stop position without removing it; this way the steering wheel will not lock.

When towing, no vacuum will be created in the servo brake system and it will be necessary to exert more pressure on the pedal during braking.

The power steering system will also be inoperative and it will therefore be necessary to exert greater pressure on the steering wheel.

CAUTION:
Do not, under any circumstances, remove the key from the ignition as this will cause the steering wheel to lock.

Front tow hook

Rear tow hook

Alfawiki.nl

MAINTENANCE OPERATIONS

The maintenance operations consist of checking and restoring the efficiency of various parts of the vehicle subject to wear and misadjustment during the normal vehicle operation.
The following pages contain the tables with the list of the maintenance operations to be carried out during services and when the various mileages limits have been reached.

CAUTION:
Precautions to be respected before the operations. The engine compartment contains numerous moving parts, high voltage cables and parts which become extremely hot and which present a potential danger. The following indications should be strictly adhered to:
– Switch off the engine and wait for it to cool.
– Do not smoke or use naked flames. The presence of fuel may cause a fire.
– Make sure a fire extinguisher is close to hand.

List of operations to be carried out between 1.500 km and 2.500 km

1	Replace engine oil, filter and check sealing of lubrication system.
2	Check condition and tension of alternator, water pump, air conditioning compressor, power steering pump drive belts.
3	Check sealing of fuel supply system.
4	Check smoke level at exhaust.
5	Check antifreeze mixture level and sealing of cooling system.
6	Check condition of drive axle, power steering and steering knuckle protective boots.
7	Check sealing of braking system.
8	Check level of clutch and brake fluid.
9	Check handbrake travel.
10	Vehicle test.

Alfawiki.nl

MAINTENANCE OPERATIONS (continued)

	Operations to be carried out at the km indicated	km x 1000									
		20	40	60	80	100	120	140	160	180	200
1	Replace engine oil and filter (every year) and check sealing of lubrication circuit	every 10,000 km									
2	Check valve clearance		●		●		●		●		●
3	Check condition of timing drive belt				●	●					●
4	Replace timing drive belt						●				
5	Check condition and tension of alternator - water pump and power steering pump Poly V drive belt		●		●		●		●		●
6	Check condition and tension of air conditioning drive trapezoidal belt	●	●	●	●	●	●	●	●	●	●
7	Check air filter cartridge		●		●		●		●		●
8	Check level of antifreeze mixture	●	●	●	●	●	●	●	●	●	●
9	Check brake/clutch fluid level	●	●	●	●	●	●	●	●	●	●
10	Check gearbox and differential oil level		●		●				●		●
11	Replace gearbox and differential oil						●				
12	Check condition of drive axle, power steering and steering knuckle protective boots	●	●	●	●	●	●	●	●	●	●
13	Check sealing of braking system tubes	●	●	●	●	●	●	●	●	●	●
14	Check handbrake travel	●	●	●	●	●	●	●	●	●	●
15	Check level of power steering and self levelling suspension oil (if applicable)	●	●	●	●	●	●	●	●	●	●
16	Vehicle test	●	●	●	●	●	●	●	●	●	●

Alfawiki.nl

MAINTENENCE OPERATIONS (Continued)

To maintain the vehicle in good working order, follow these recommendations:

Every 500 km (or during refueling) check:

- Engine oil level.
- Engine coolant level.
- Clutch/brake fluid level.
- Tyre pressure.
- Windscreen and headlight washer liquid.

Engine oil and filter

These should be replaced at the specified mileage. Change once a year if the mileage limits are not reached.

Air filter

When the vehicle is regularly driven on dusty roads, the air filter should be checked more regularly than specified.

Brake pads

On some models, worn brake pads are signalled by a warning light on the instrument panel.
For vehicles equipped with front brake pad wear detectors only, rear brake pads should also be checked when the front ones are replaced.
The rear pads, however may not need replacing due to their function on the vehicle but should be checked at a later date.

Brake/clutch fluid

The brake fluid is hygroscopic, ie, it absorbs humidity. To avoid braking defects, the brake fluid must be replaced periodically, regardless of the mileage covered, depending on the type of vehicle.

Battery

The electrolyte level should be checked regularly during warm weather.

Air conditioning (if fitted)

The condition of the air filter (if fitted) on the evaporator should be checked once a year by the Alfa Romeo Assistance Network, preferably just before the summer. (It should be checked more frequently if the vehicle is regularly driven on dusty roads).

Antifreeze

In order to conserve the protective characteristics of the mixture, it is advisable to top-up the anti-freeze level with Alfa Romeo Concentrated Antifreeze.

Note

During abnormal use of the vehicle (eg. on roads covered with salt and/or corrosive substances, on bumpy roads etc.) the drive shafts and steering box boots, the cleanliness and lubrication of the articulation points and the hinges, doors, bonnet and boot lid locks etc. should be checked frequently.
If it becomes necessary (in an emergency) to use fuel, lubricants, and/or fluids in general which do not meet the manufacturer's requirements, both the fluids and relative filters should be replaced as soon as possible.

Alfawiki.nl

SCHEDULED CHECKS AND MAINTENENCE

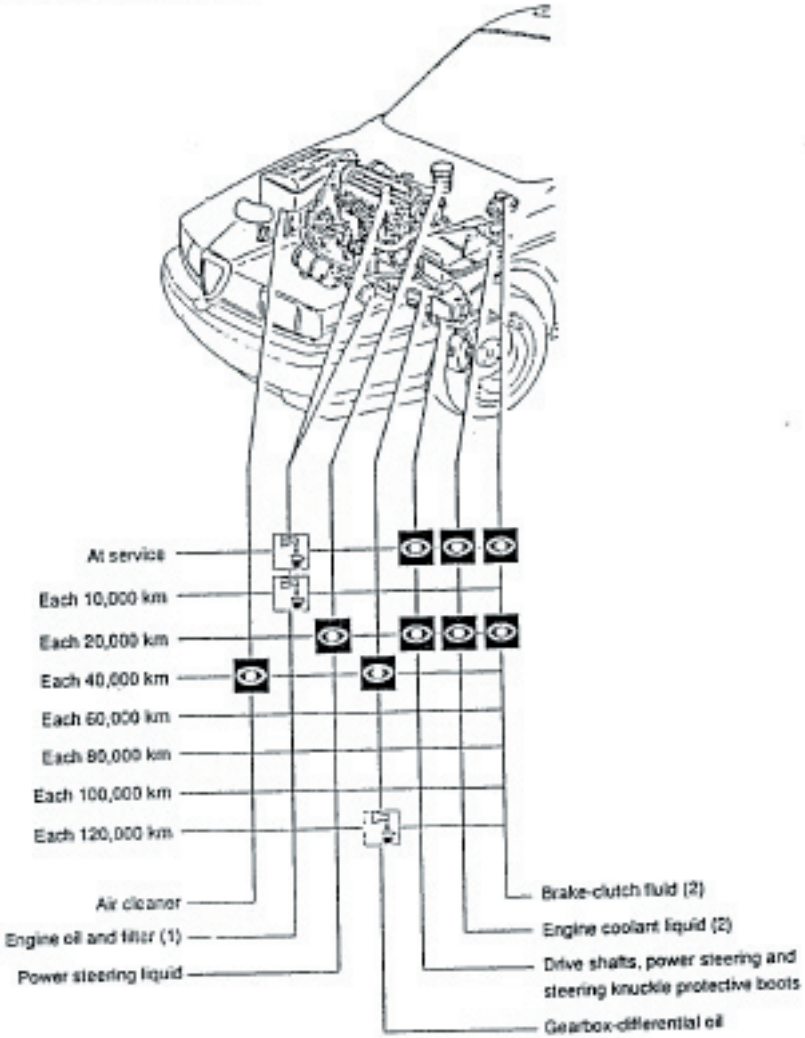

1. Replace every year.
2. Carry out frequently.

Alfawiki.nl

FLUIDS AND LUBRICANTS

Type	Ref. Group	Application	Classification	Name
OIL	01 - Engine	Engine (Refilling)	API CD/SF CCMC PD2 SAE 15W/40	SELENIA TURBO DIESEL SYNTHETIC MOTOR OIL 15W/40
	13 - Gearbox and differential	Gearbox and differential (Refilling)	API GL-4	TUTELA ZC 80/S
	80 - Heater/ventilation	Compressor (Refilling)	–	Suniso 5GS
FLUID	07 - Engine cooling	Cooling system (Refilling)	–	ALFA ROMEO CLIMAFLUID PERMANENT -40 °C
				ALFA ROMEO ANTIFREEZE (CONCENTRATED) (*)
	12 - Clutch	Brake and clutch hydraulic system (Refilling)	DOT 4 SAE J 1703 F	ALFA ROMEO BRAKE FLUID SUPER DOT 4
	22 - Brakes			
	23 - Steering	Power steering system (Refilling)	G.M. DEXRON II	TUTELA GI/A
	80 - Heater/ventilation	Air conditioning system (Refilling)	–	RIVOIRA: FREON 12
GREASE	SEE SPECIFIC FUNCTIONAL GROUPS			

(*) Mixture consisting of: 55% Alfa Romeo Antifreeze and 45% distilled water.

Alfawiki.nl

APPROXIMATE REFILL CAPACITIES

Refill capacities \ Version		155 TD
Fuel tank		63 litres
Fuel reserve		5 litres
Engine oil	Total capacity: oil sump - filter - wells - radiator (for revision)	6.0 litres (5.30 kg)
	Partial capacity: filter + sump (for periodical refilling)	5.0 litres (4.40 kg)
	Only sump capacity	4.30 litres (3.80 kg)
Gearbox- differential oil		1.4 litres (1.3 kg)
Power steering system oil		1.0 litres (0.9 kg)
Brake and clutch circuit oil		0.6 litres (0.56 kg)
Engine coolant system fluid		8.3 litres
Air conditioning compressor oil		236 cm^3
Air conditioning system fluid		0.950 kg

Alfawiki.nl

ENGINE MAINTENANCE OPERATIONS

REPLACEMENT OF ENGINE OIL AND FILTER

CAUTION:
Engine oil is harmful to the skin. Keep all contact with the skin to a minimum. Wash off any oil with soap and water.

- Position vehicle on lift.

1. When the engine is warm remove the oil cap.

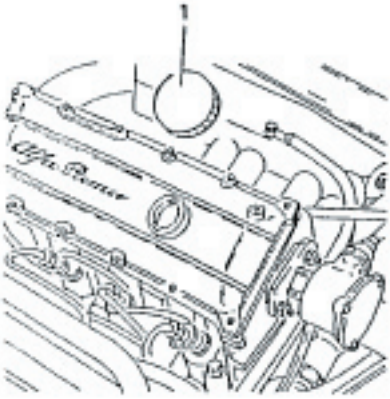

1. Remove the dipstick.

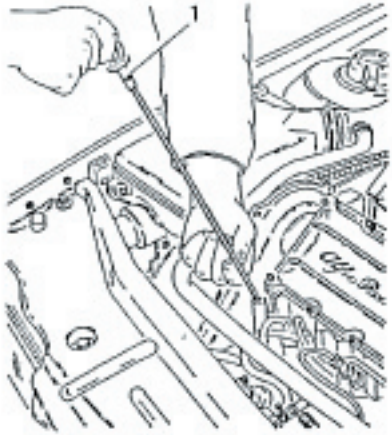

1. Raise the vehicle.
2. Unscrew the screws and remove the engine protective lower panel.

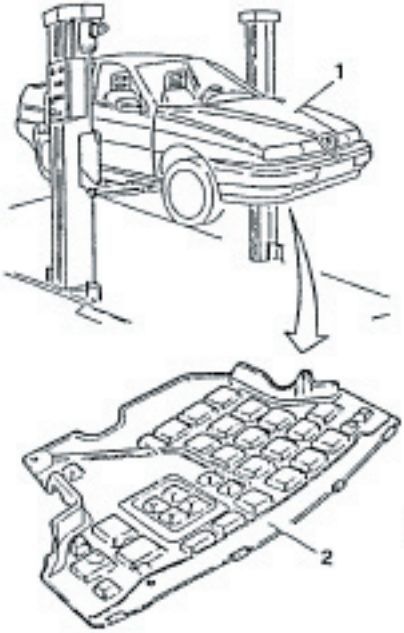

Alfawiki.nl

1. Unscrew the drainage plug and leave the oil to drain completely for at least 15 minutes.

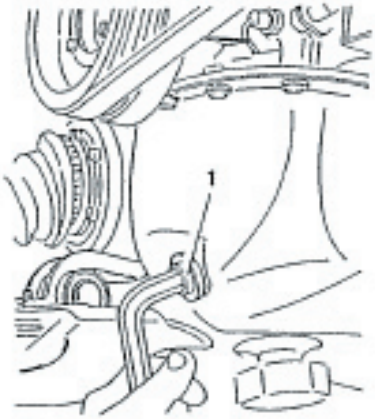

CAUTION:
Do not dispose of oil in the environment; indiscriminate dumping of the product causes pollution; find out where the nearest collection point in your area is.

CAUTION:
The presence of whitish substances is caused by engine coolant leaking into the oil circuit.
Low viscosity is caused by dilution with fuel.

1. Using a suitable tool, unblock and remove the oil filter.

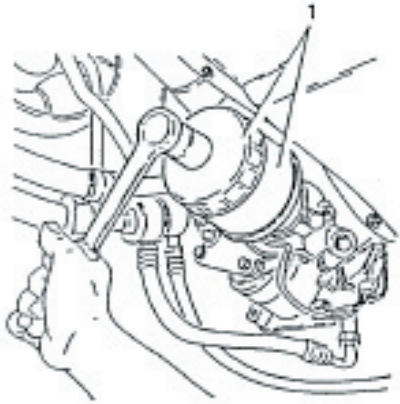

- Clean the drainage plug and screw it back on with the relative gasket.
- Lubricate the new filter gasket with oil and screw it back on tightening it completely by hand.
- Lower the vehicle.
- Refill the engine with the correct type and quantity of oil.
- Check that the engine oil level is correct with the dipstick.

CAUTION:
The engine oil level should be checked with the vehicle on a flat surface.
If the oil level exceeds the MAX notch, a loss of pressure may be caused by an excessive evaporation of the oil.

- Install oil cap, and run the engine at idle speed for approx. 2 minutes, turn off engine and wait for a couple of minutes.
- Check the oil level and check for leaks.

Alfawiki.nl

CHECKING AND ADJUSTING VALVE CLEARANCE

1. Unscrew the screws and remove the timing cover.
- Remove the gasket.

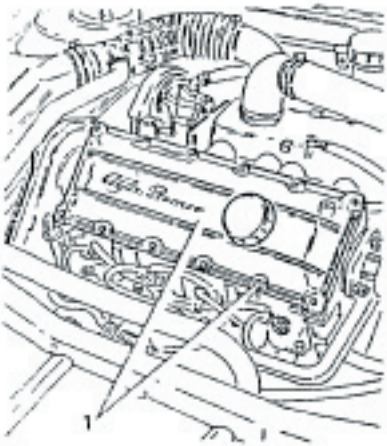

- Rotate the camshaft so that the intake and exhaust valves are in the closed position.
1. When the engine is cold, check that the clearance between the cam heel radius and the tappet falls within the prescribed limits.

Operating valve clearance (when engine is cold)	
Intake	0.30 ± 0.05 mm
Exhaust	0.35 ± 0.05 mm

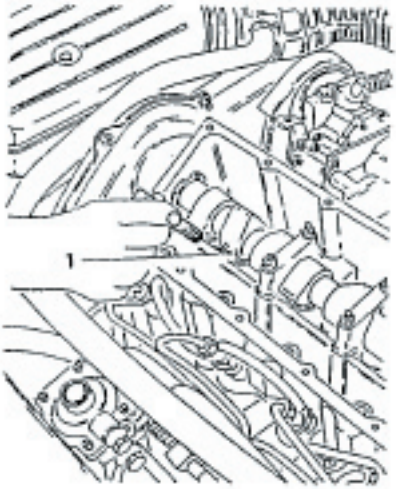

- If the valve clearance does not fall within the prescribed limits, proceed as follows:
1. Using the pressure lever N° 1.820.262.000 lower the tappets.

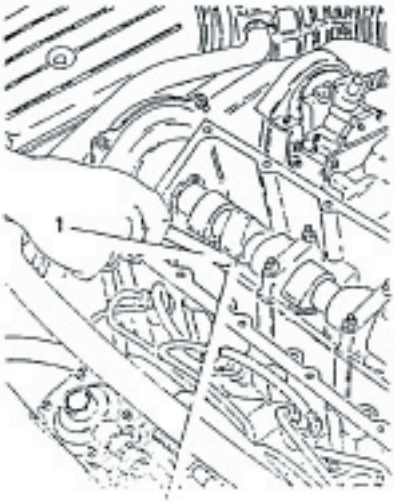

1.820.262.000

Alfawiki.nl

1. Position tappet support tool N° 1.820.261.000 and turn the notches on the edge of the tappet to facilitate the subsequent extraction of the regulating plate to be replaced.

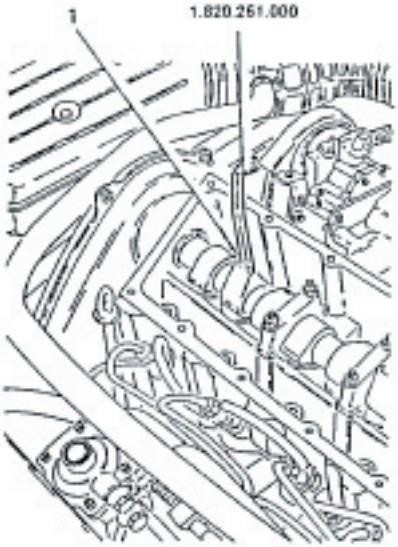

1. Extract and remove the tappet regulating plate.

- Replace the plate removed beforehand with another which has the correct thickness to reset the correct valve clearance, then repeat the above mentioned operations for the remaining valves.

REPLACEMENT OF TIMING BELT

1. Position the vehicle on the two column lift.

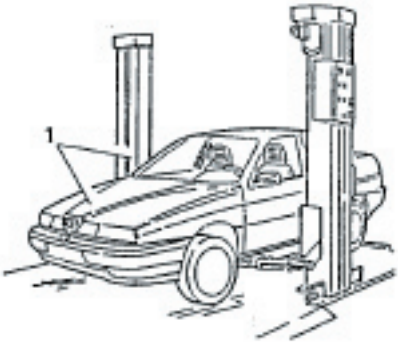

- Disconnect the (-) negative clamp of the battery.
- Raise the vehicle.
- Unscrew the fixing screws and remove the lower engine protection panel.
1. Remove the front righthand wheel.

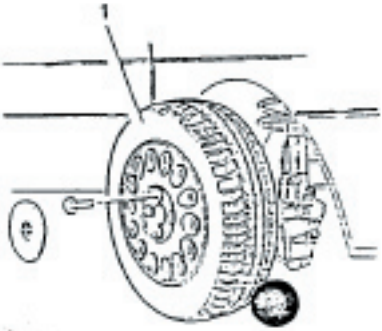

Alfawiki.nl

1. Remove spray guard from the righthand front wheel compartment.

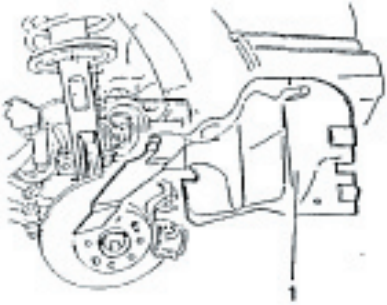

1. Acting on the micrometric tensioner, loosen the tension of the air conditioning compressor drive belt.
2. Unscrew the screws securing the air conditioning compressor.

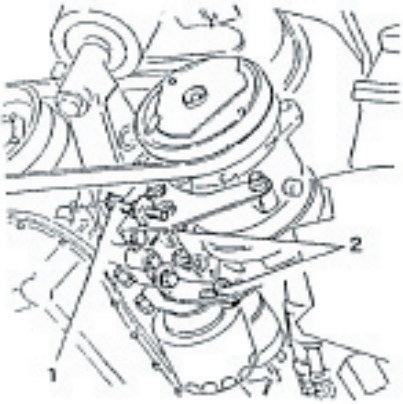

1. Extract the air conditioning compressor drive belt from the auxiliary parts control pulley.

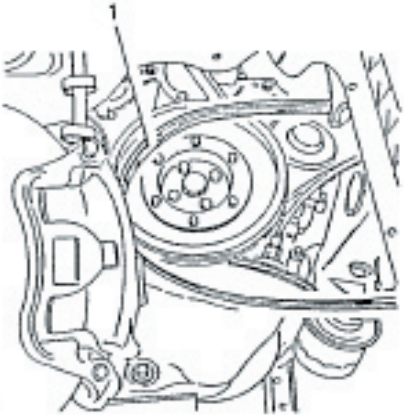

– Lower the vehicle.

1. Remove the front cover of the timing belt.

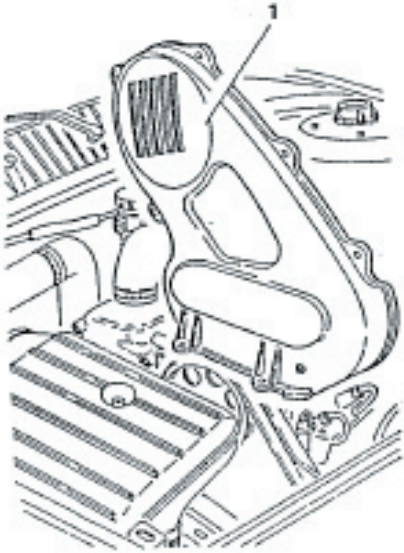

Alfawiki.nl

1. Remove the corrugated air intake sleeve and move it sideways without disconnecting the latter from the oil vapour recirculation pipe.

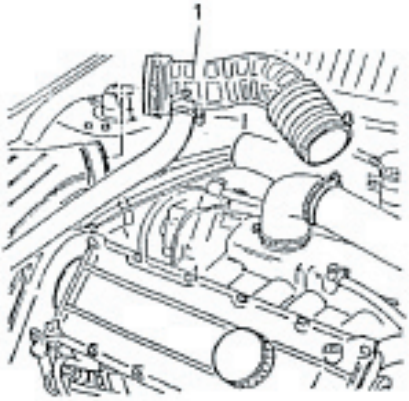

1. Unscrew the screws and remove the complete air filter

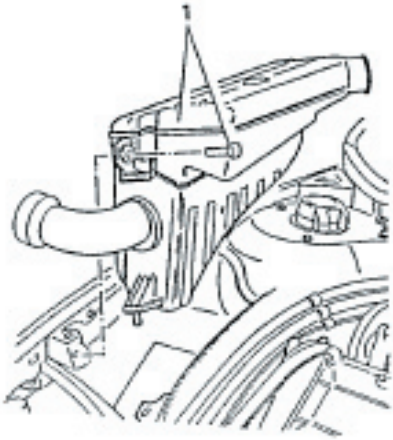

1. Loosen the two bolts securing the alternator.
2. Extract the alternator - water pump drive belt and remove it.

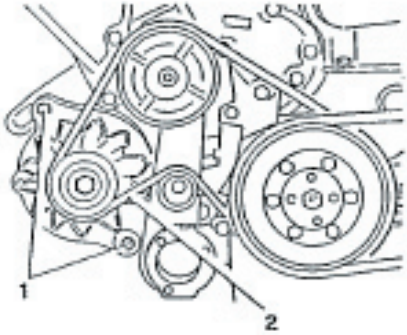

– Raise the vehicle.

1. Loosen the front nut securing the gearbox to the relative support bracket.

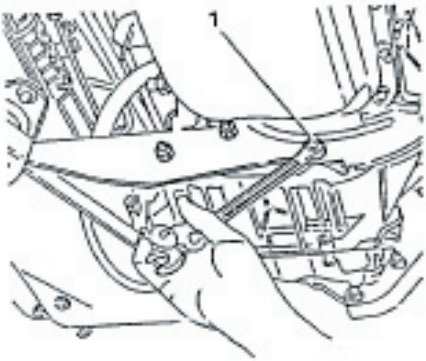

Alfawiki.nl

1. Install support N° 1.824.017.000 (C.2.0130) onto tool N° 1.824.016.000 (C.2.0129).
2. Position the weight, with the knurled part at a distance of 120 mm on the millimetric rod and block it there.

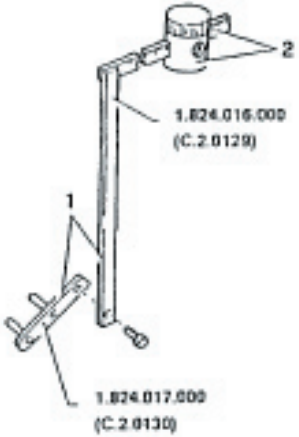

1. Fit the tool installed in this way on the belt tensioner as illustrated in the figure and, acting on the joint, turn the millimetric rod so that it is horizontal.
- Set the drive belt by making the crankshaft complete two revolutions in the normal rotational direction.
2. Tighten the nut securing the belt tensioner to the prescribed torque.

CAUTION:
During this latest phase, the millimetric rod may move from its horizontal position; if this is the case, act again on the belt tensioner, reset the millimetric rod to its original position and repeat the operation.

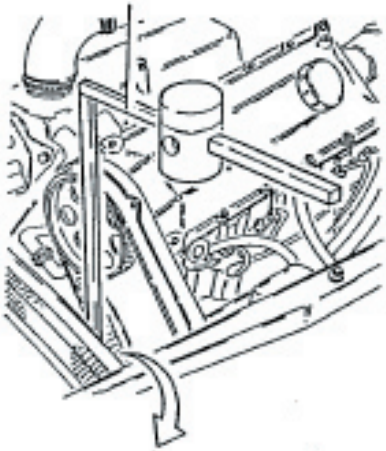

37 ÷ 46 Nm
3.8 ÷ 4.7 kgm

- Remove the tools for tensioning the belt.
- Tension the auxiliary part drive belts (see relevant paragraphs).

Alfawiki.nl

AUXILIARY PART BELTS

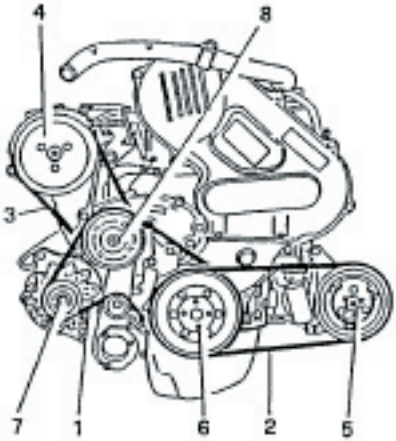

1. *Alternator - water pump drive belt*
2. *Air conditioning compressor drive belt*
3. *Power steering pump drive belt*
4. *Power steering pump*
5. *Air conditioning compressor*
6. *Auxiliary parts control pulley*
7. *Alternator*
8. *Water pump*

NOTE: When checking the tensioning of the belt, visibly check the condition of the belt itself, ensuring there are no signs of:
- cuts
- cracks
- surface wear of the material (which appears smooth and shiny)
- dry or hardened parts (loss of adherence).

If any of these conditions are found, replace the belt.

CAUTION:
If the belt comes into contact with oil or solvents, the elasticity of the belt's rubber may be affected which may reduce its adherence.

AIR CONDITIONING COMPRESSOR DRIVE BELT

Checking and tensioning

1. Position the vehicle on a lift.
2. Unscrew the screws and remove the engine protective lower panel.

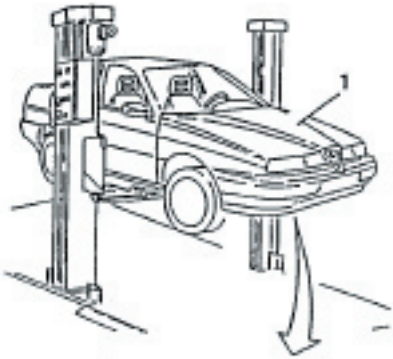

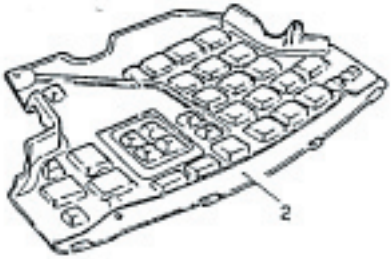

Alfawiki.nl

1. Proceed as indicated in the figure, measure the belt tension using tool N 1.824.015.000 (C.2.0128).

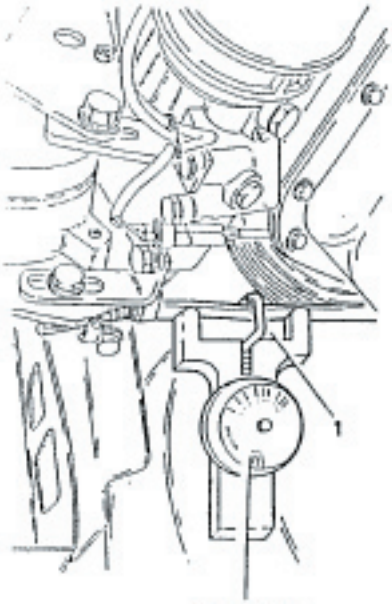

1.824.015.000
(C.2.0128)

- Check that the tensioning values, measured using the correct tool, fall within the prescribed limits.

Trapezoidal belt tension "AV 10" of air conditioning compressor	
On installation	400 ÷ 550 N
Re-tensioning	280 ÷ 370 N

NOTA: The belt can be re-tensioned after a short running in period by operating as follows:
- bring the engine to a normal running temperature
- turn off the engine and wait for it to cool
- re-tension the belt to the prescribed value.

- If the correct tensioning values are not found, operate as follows:
1. Loosen the air conditioning compressor screws.
2. Acting on the micrometric tensioner, reset the belt to the correct tension.
- Tighten the air conditioning compressor screws.

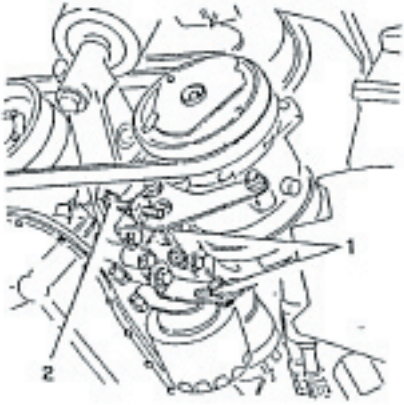

Alfawiki.nl

Replacement

1. Position the vehicle over a lift and raise it.
2. Unscrew the screws and remove the engine protective lower panel.

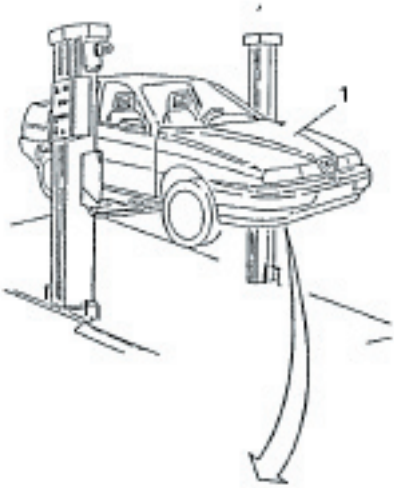

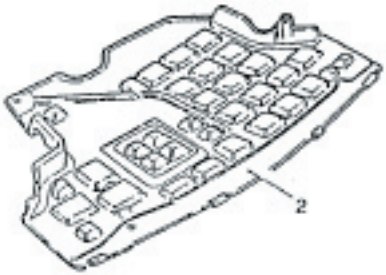

1. Loosen the screws securing the air conditioning compressor.
2. Acting on the micrometric tensioner, decrease the belt tension.

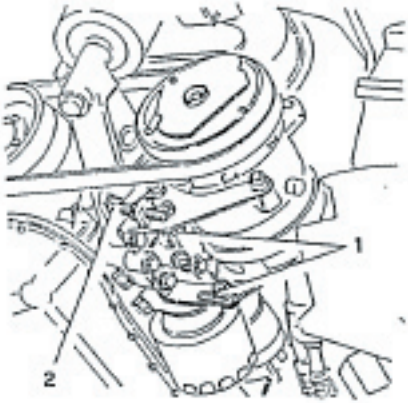

1. Position a hydraulic jack under the engine as indicated in the figure.

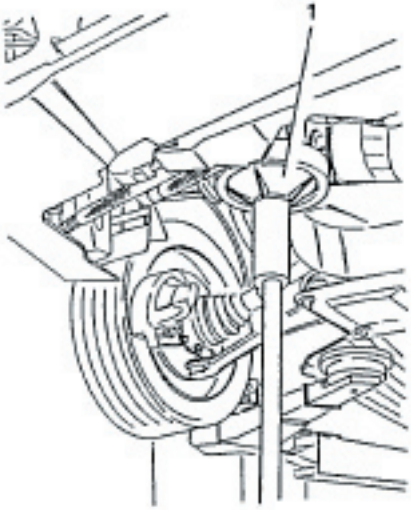

Alfawiki.nl

1. Unscrew the screws securing the oil filter support and the injection pump to the engine elastic support, timing side.

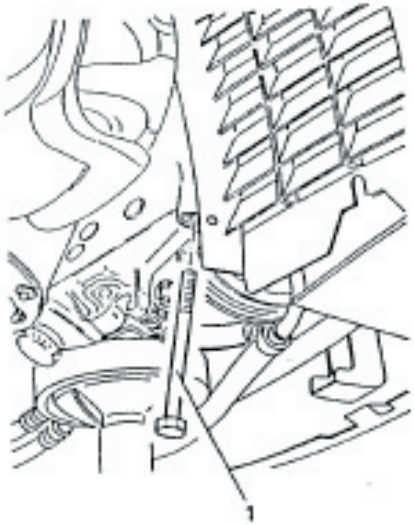

- Lower the hydraulic jack enough to free the compressor drive belt between the engine support and remove it.
- Fit a new belt by repeating the removal operations in the reverse order and tension it following the indications in the previous paragraph.

ALTERNATOR - WATER PUMP DRIVE BELT

Checking and tensioning

- Unscrew the screws securing the air filter and tip it over without disconnecting the sleeves from the latter.
1. Operate as indicated in the figure, measure the tension of the belt using tool N° 1.824.018.000 (C.2.0131).

1.824.018.000
(C.2.0131)

- Check that the tension values, measured using a suitable tool, fall within the prescribed values.

Belt tension "POLY-VK5" alternator - water pump	
On installation	400 ÷ 450 N
Re-tensioning	300 ÷ 350 N

Alfawiki.nl

NOTE: The belt can be re-tensioned after a short running in period, by operating as follows:
- bring the engine to a normal running temperature
- turn the engine over for approx. 10 minutes
- turn the engine off and wait for it to cool
- re-tension the belt to the prescribed value.

- If incorrect tension values are found, proceed as follows:
1. Loosen the two alternator bolts.
2. Move the alternator sideways to increase the tension of the belt.
- Tighten the upper alternator bolt and check the tension of the belt.
- If the tension of the belt is correct, tighten the lower bolt securing the alternator to the support bracket.
- Refit the air filter.

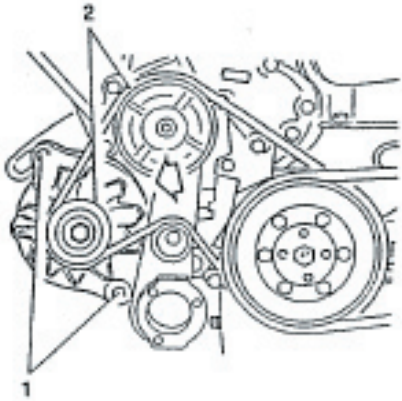

Replacement

- Position the vehicle on the lift and raise it.
- Unscrew the screws and remove the engine protective lower panel.
- Extract the air conditioning compressor drive belt from the auxiliary part control pulley.
- Lower the vehicle.
- Unscrew the screws securing the air filter and tip it over without disconnecting the latter from the sleeves.
1. Loosen the alternator fastening bolts.
2. Remove the alternator - water pump control belt.

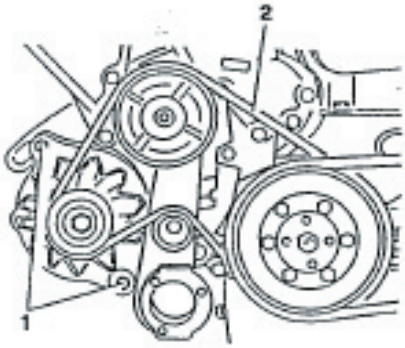

- Install a new belt by repeating the above operations in the reverse order and tighten it following the procedure described in the previous paragraph.
- Complete the re-installation by repeating the disassembly operations in the reverse order, and check that the air conditioning compressor control belt is tensioned (see previous paragraph).

Alfawiki.nl

POWER STEERING PUMP DRIVE BELT

Checking and tensioning

- Unscrew the air filter screws and tip it over without disconnecting the latter from the sleeves.

1. Proceed as indicated in the figure, measure the tension of the belt using tool N° 1.824.018.000 (C.2.0131).

- Check that the tensioning values, measured using a suitable tool, fall within the prescribed limits.

Belt tension "POLY-VK5" power steering pump	
On installation	400 ÷ 450 N
Re-tensioning	300 ÷ 350 N

NOTA: The belt can be re-tensioned after a short running in period, operating as follows:
- bring the engine to a normal operating temperature;
- turn the engine over for approx.10 minutes;
- turn off the engine and wait for it to cool;
- re-tension the belt to the prescribed value.

- If incorrect tension values are found, proceed as follows:

1. Loosen the power steering pump screws.
2. Acting on the micrometric tensioner, reset the correct belt tensioning.

- Tighten the power steering pump tightening screws.

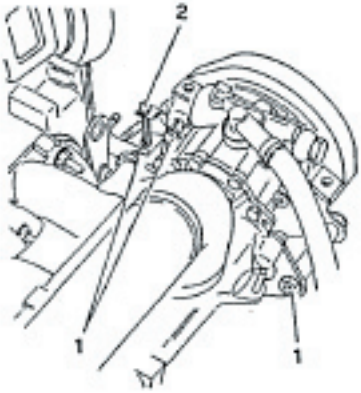

Alfawiki.nl

Replacement

- Remove the alternator - water pump control belt (see specific paragraph).
1. Loosen the power steering pump screws.
2. Acting on the micrometric tensioner, decrease the tension of the belt.

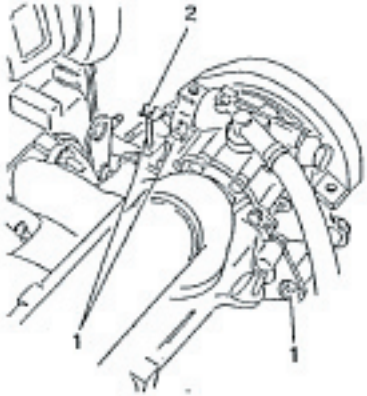

1. Unscrew the screws and remove the power steering pump belt guard.
2. Remove the power steering pump control belt.

- Install a new belt by repeating the above operations in the reverse order and tighten it following the procedure described in the previous paragraph.
- Complete the re-installation by repeating the disassembly operations in the reverse order, and check that the alternator - water pump and the air conditioning compressor drive belt is tensioned (see previous paragraph).

CHECK OR REPLACEMENT OF AIR FILTER

1. Disconnect the corrugated sleeve from the air filter cover.

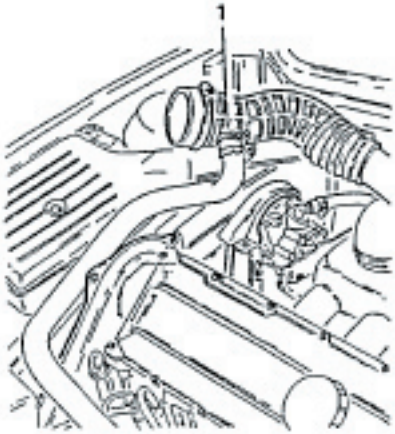

Alfawiki.nl

1. Unscrew the air filter cover screws.

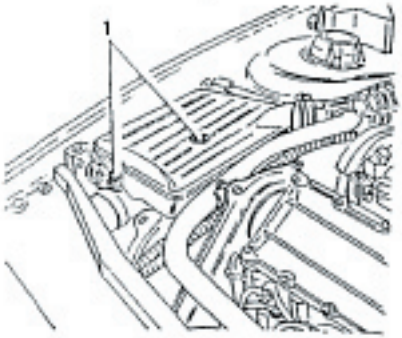

1. Remove the air filter cover.
2. Remove the air filter.

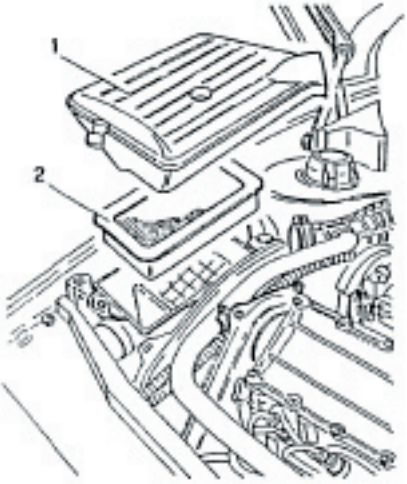

CAUTION:
Any filter cleaning operation may cause damage which subsequently risks compromising the correct functioning of the engine supply system.

- Carefully clean the air filter container.
- Check the cartridge's condition and, if necessary, replace it with a new one.
- Reassemble the cover and fix it with the relative screws.
- Connect the corrugated sleeve to the air filter cover.

NOTA: If the filter shows traces of oil, check there are no infiltrations in the air circuit.

CHECK EXHAUST SMOKE LEVEL

- Start up the engine and bring it to a normal running temperature.

1. Insert the exhaust gas drawing pipe of the opacimeter into the end section of the exhaust pipe.

- Make all necessary connections and equipment adjustments in accordane with the manufacturer's procedu

Alfawiki.nl

- Depress the accelerator fully three times in quick succession until the max revs are reached or until the revs limiter intervenes.
- Take the measurements after five consecutive accelerations and note the max. values obtained.
- To obtain the test value, work out the arithmetic average of the three values closest together.

NOTE: In the event of more than one suitable group of three values, choose the one which gives the highest average value.

- Check that the smoke level falls within the prescribed value.

Smoke level at exhaust max. value
< 70 %

- If the exhaust smoke level is greater than the prescribed value, the following checks must be carried out:
  - check condition of air filter;
  - check timing of injection pump;
  - check valve clearance and setting of timing;
  - check setting and clean injectors;
  - check compression ratio.
- If, regardless of the above checks, the smoke level remains outside the prescribed limits, the injection pump must be overhauled.

TEST SEALING OF ENGINE COOLANT SYSTEM PRESSURIZED CAP

1. Screw the connector to the lower end of the testing instrument.
2. Install the expansion tank pressurized cap onto the connector.
3. Manually pressurize the piston and check that the release valve opens at the correct pressure which can be read off the instrument.

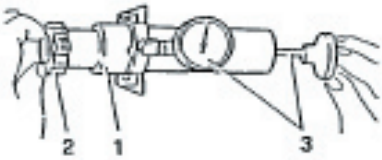

Pressure setting of the pressurized cap
0.98 ± 0.1 bar (1 ± 0.1 kg/cm²)

SEALING TEST ON ENGINE COOLING SYSTEM

1. Unscrew and remove the pressurized cap from the expansion tank.

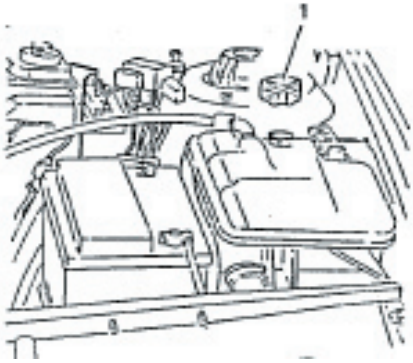

Alfawiki.nl

1. Screw the connection of the seal test instrument onto the neck of the expansion tank.
2. Pressurize the circuit manually and check that the pressure remains at the correct value. If this is not the case, check that the sleeves and radiator do not leak.

Hydraulic system control pressure
1.05 bar (1.1 kg/cm²)

CAUTION:
For safety reasons the pressure during these checks with the test instrument should not exceed 1.38 bar (1.4 kg/cm²).

CHECKING LEVEL AND REPLACING ENGINE COOLANT

Checking

1. Visably check, when the engine is cold, that the engine coolant reaches the notch indicated by the arrow on the expansion tank, otherwise top-up the system with the prescribed fluid.

Replacement

- Position the vehicle on the lift.
1. Unscrew and remove the expansion tank cap.

CAUTION:
Do not remove the expansion tank cap when the engine is hot under any circumstances!

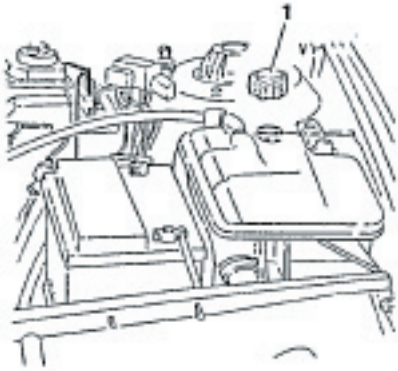

Alfawiki.nl

1. Raise the vehicle.
2. Unscrew the screws and remove the engine lower protective panel.

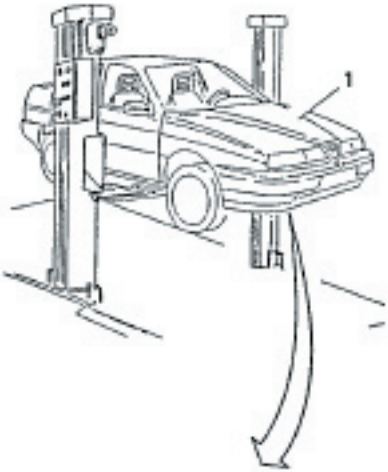

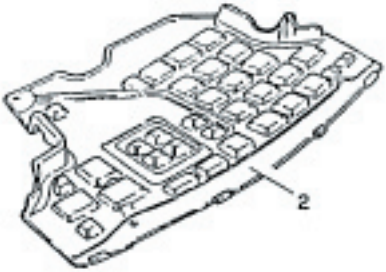

1. Drain the engine coolant by disconnecting the liquid from radiator outlet sleeve and recover it in a suitable container.

CAUTION:
The anti-freeze mixture used as engine coolant damages paint: avoid all contact with painted parts.

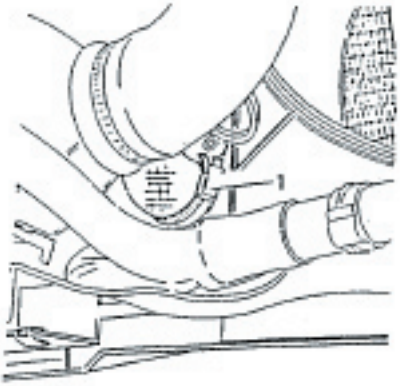

- Reconnect the radiator sleeve and all the pipes that have been disconnected, checking that the clamps are tightened.

1. Top-up to the notch indicated on the expansion tank.

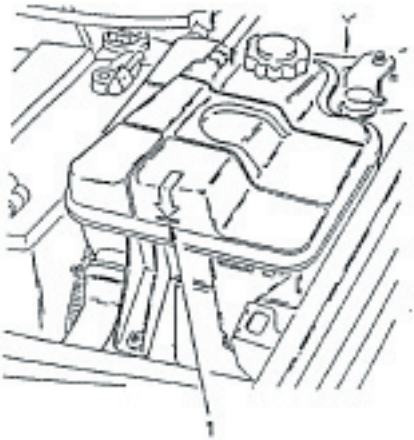

Alfawiki.nl

- The quality and quantities of the engine coolant are contained in the following table:

Minimum temperature: -40°C		
Concentrated antifreeze	Alfa Romeo Antifreeze	4.6 Litres (55%)
Distilled water		3.7 Litres (45%)
Ready-for-use antifreeze	Alfa Romeo Climafluid Permanent -40°C	8.3 Litres

- Start-up the engine and bring it the normal running temperature so that the thermostat opens and frees the residual air in the circuit.

1. When the engine is cold, top-up the expansion tank to the level indicated.
2. Screw the pressurized cap on the expansion tank.

CAUTION:
It is unadvisable to mix different types or brands of antifreeze!
Do not use rust-proofing additives: they may not be compatible with the type of antifreeze being used!

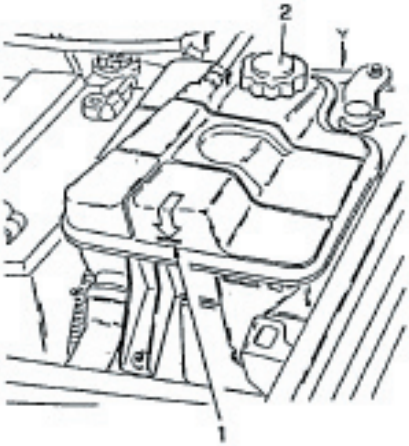

MAINTENANCE OF MECHANICAL UNITS

As for 155 T. Spark
except for:

TIGHTENING TORQUES

GEARBOX AND DIFFERENTIAL

Part	Nm	kgm
Threaded gearbox oil cap	29.9 ÷ 48.3	3.05 ÷ 4.92
Magnetic cap on gearbox casing for draining oil	29.9 ÷ 48.3	3.05 ÷ 4.92

Alfawiki.nl

TECHNICAL CHARACTERISTICS AND SPECIFICATIONS

BELT TENSIONING

Tensioning \ Belt	Air conditioning compressor	Alternator - water pump	Power steering pump
On installation	400 ÷ 550 N	400 ÷ 450 N	400 ÷ 450 N
Re-tensioning	280 ÷ 370 N	300 ÷ 350 N	300 ÷ 350 N

VALVE CLEARANCE

NOTE: Check/adjust valve clearance only when the engine is cold.

Valve clearance	Intake	0.30 ± 0.05 mm
	Exhaust	0.35 ± 0.05 mm

CHECK SMOKE LEVEL AT EXHAUST

Max. smoke level value at exhaust	< 70 %

COOLING SYSTEM

Hydraulic system test pressure	1.08 bar (1.1 kg/cm^2)
Pressurized cap setting pressure	0.98 ± 0.1 bar (1 ± 0.1 kg/cm^2)

Alfawiki.nl

TIGHTENING TORQUES

ENGINE

Part	Nm	kgm
Nut securing the timing belt tensioner jockey pulley	37 ÷ 46	3.8 ÷ 4.7

GEARBOX AND DIFFERENTIAL

Part	Nm	kgm
Threaded cap for introducing gearbox oil	29.9 ÷ 48.3	3.05 ÷ 4.92
Magnetic cap on gearbox casing for oil drainage	29.9 ÷ 48.3	3.05 ÷ 4.92

SPECIFIC TOOLS

1.820.261.000	Cup tappet support tool
1.820.262.000	Lever for replacing tappet plates
1.820.289.000	Flywheel locking tool (to be used on vehicle)
1.824.015.000 (C.2.0128)	Tool for checking belt tension
1.824.016.000 (C.2.0129)	Timing belt tensioning rod
1.824.017.000 (C.2.0130)	End to tension timing belt
1.824.018.000 (C.2.0131)	Tool to check belt tension

Alfawiki.nl

155 TD 2.E

REPAIR MANUA

VEHICLE CHARACTERISTIC AND MAINTENANC

Alfa Romeo

Alfawiki.nl

GROUP 00

VEHICLE CHARACTERISTICS AND MAINTENANCE

INDEX

DIMENSIONS . . . . . 00 - 3

WEIGHTS AND LOADS . . . . . 00 - 4

WHEELS AND TYRES . . . . . 00 - 5

IDENTIFICATION OF MODEL . . . . . 00 - 6
- Identification labels . . . . . 00 - 6
- Identification of model . . . . . 00 - 7
- Overall identification label . . . . . 00 - 8
- Body pain identification label . . . . . 00 - 8

SPECIFIC TOOLS . . . . . 00 - 9

LIFTING AND TOWING POINTS . . . . . 00 - 9

MAINTENANCE OPERATIONS 00-11
- Scheduled servicing chart 00-14

FLUIDS AND LUBRICANTS 00-15

APPROXIMATE REFILL CAPACITIES 00-16

ENGINE MAINTENANCE OPERATIONS 00-17
- Replacing engine oil and filter 00-17
- Checking and adjusting valve clearance 00-18
- Auxiliary organs drive belt 00-20
- Checking and replacing air cleaner cartridge 00-22
- Checking exhaust smoke 00-24
- Engine cooling system pressurized cap sealing test 00-25
- Engine cooling system sealing test 00-25
- Checking level and replacing engine coolant fluid 00-26

Alfawiki.nl

MAINTENANCE OF MECHANICAL UNITS 00-27

TECHNICAL CHARACTERISTICS AND SPECIFICATIONS 00-28
– Valve clearance 00-28
– Checking exhaust smoke 00-28
– Cooling system 00-28
– Tightening torques 00-28
- Engine 00-28

SPECIFIC TOOLS 00-28

Alfawiki.nl

DIMENSIONS

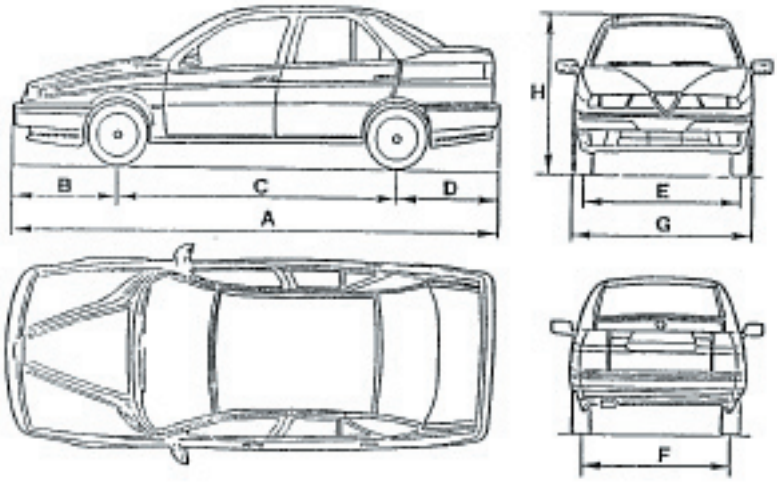

Dimensions \ Version			155 TD 2.5
A	Overall length	mm	4443
B	Front overhang	mm	960
C	Wheel base	mm	2540
D	Rear overhang	mm	943
E	Front track	mm	1477
F	Rear track	mm	1402
G	Overall width	mm	1700
H	Height	mm	1440

Alfawiki.nl

WEIGHTS AND LOADS

Weights and loads \ Version			155 TD 2.5
Kerb weight (without driver)		kg	1420
Vehicle weight fully loaded		kg	1900
Useful load		kg	480
Maximum weight permitted per axle	front	kg	1060
	rear	kg	970
Towable weight	with trailer fitted with brakes	kg	1500
	with trailer without brakes	kg	450
Maximum loading on tow hook		kg	105

Alfawiki.nl

WHEELS AND TYRES

Characteristics \ Version		155 TD 2.5
Rim dimensions		6 J x 15"
Tyre dimensions	standard	205/50 R15" 86 V
	optional	—
Tyre pressure bar - kg/cm²	average load at normal speed	front 2.5 rear 2.3
	full load at high speed	front 2.8 rear 2.5
Spare wheel (compact type)	rim dimension	4 J x 15"
	tyre dimension	115/70 R15" 90M
	tyre pressure bar - kg/cm²	4.2

Alfawiki.nl

IDENTIFICATION OF MODEL

IDENTIFICATION LABELS

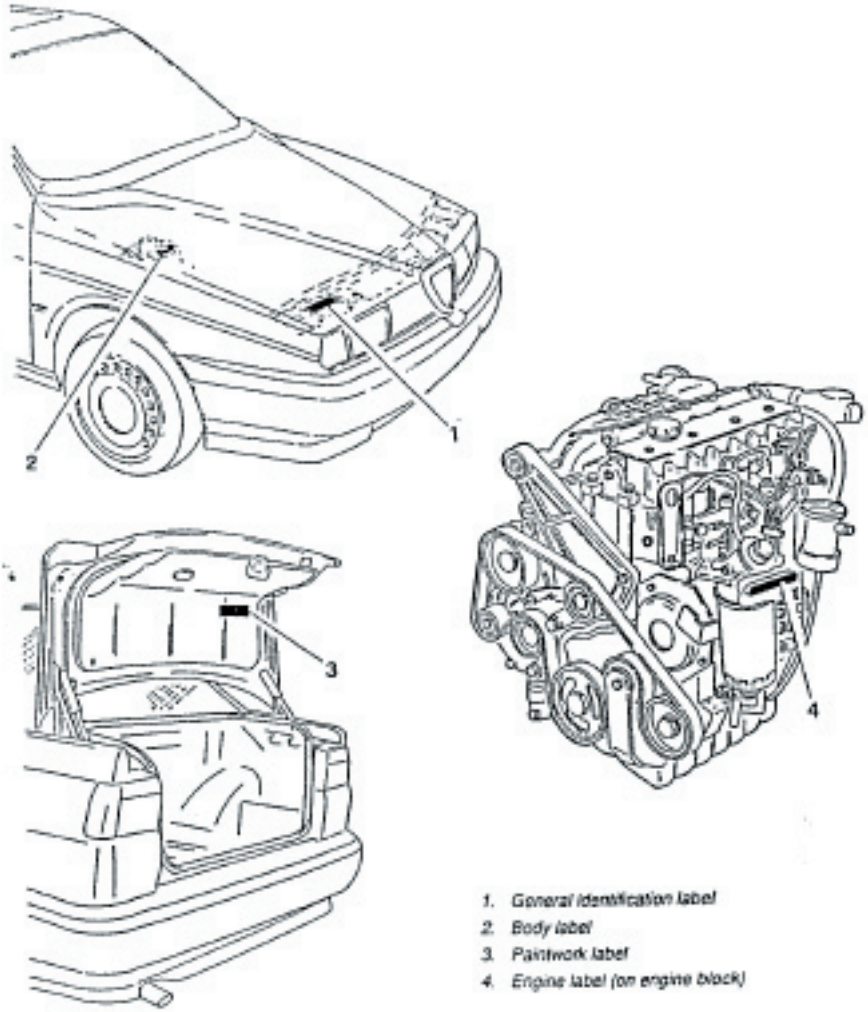

1. General identification label
2. Body label
3. Paintwork label
4. Engine label (on engine block)

Alfawiki.nl

IDENTIFICATION OF MODEL

Version		155 TD 2.5
Type		4 door saloon
Drive		R + L
Vehicle type Number	on identification label	167A1A
	in engine compartment, to one side of upper attachment of right-hand shock absorber	167000
Progressive chassis N°		0.000.000.1
Engine type and progressive N°		VM07B from 000.001

Alfawiki.nl

OVERALL IDENTIFICATION LABEL

This is located on the crossmember in the engine compartment.
It carries the identification details listed to the right:

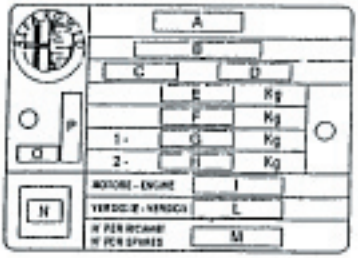

A. Manufacturer's trade name
B. Homologation number
C. Vehicle type code number
D. Progressive body number
E. Maximum permitted weight for fully loaded vehicle
F. Maximum permitted weight for fully loaded vehicle and trailer
G. Maximum permitted loading on first axle (front)
H. Maximum permitted loading on second axle (rear)
I. Engine type
L. Bodywork type code
M. Number for spare parts
N. Correct smoke coefficient (for diesel and Turbodiesel engines)
O. Supplier code
P. Foreign country of production

BODY PAINT INDENTIFICATION LABEL

This is located on the inside of the luggage compartment and carries the following data:

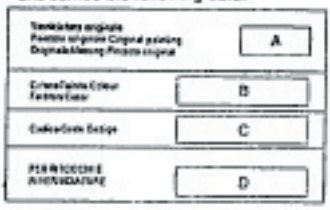

A. Paint manufacturer
B. Name of colour
C. Colour code
D. Colour code for touching up and respraying

Alfawiki.nl

SPECIFIC TOOLS

The specific tools play an important role in vehicle maintenance as they are essential to guarantee an accurate service which is reliable and rapid.
The times taken to carry out the various operations have been calculated considering the use of these tools.
This manual contains the list and illustrations regarding the specific tools which have been purposely developed by the manufacturer for the overhaul, maintenance and repair of the vehicle.
The tool identification number is formed by a new number of 10 digits and an old number of 1 letter and 5 digits:

E.g.: 1.820.088.000
(A.2.0461)

Tools of recent development only have the new number.
The assistance network is able to supply particular specific tools in accordance with the procedure already being carried out at Alfa Romeo.

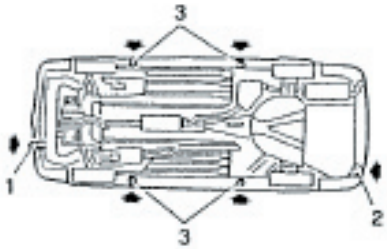

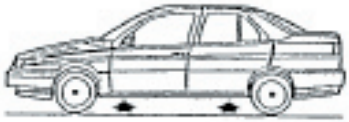

LIFTING AND TOWING POINTS

- If the vehicle needs to be lifted place the jack in the points illustrated.

CAUTION:
After raising the vehicle with the jack it should be additionally supported with safety stands.
Before raising the rear end (front end) of the vehicle, lock the wheels by placing wedges in front of (behind) the front (rear) wheels.

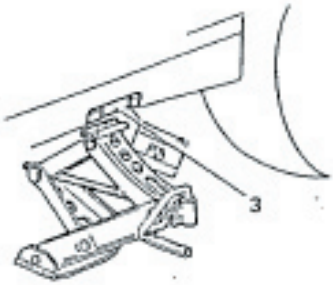

1. *Front tow hook*
2. *Rear tow hook*
3. *Seating for jack*

Alfawiki.nl

The vehicle has two tow hooks (front and rear) located on the right- hand side of the bumpers.
When towing the vehicle drive carefully and in compliance with local traffic regulations.
Before towing the ignition key of the vehicle being towed must be turned to the MAR position and then returned to the STOP position without the key being removed. In this way the steering wheel will not lock.

It must be remembered that when towing, no vacuum will be created in the servo-brake system and therefore it will be necessary to exert greater pressure on the brake pedal to obtain the same braking effect.
When the engine is switched off the power steering circuit will not be active and it will therefore necessary to exert a greater force on the steering wheel.

ATTENTION:
Never remove the key from the ignition as this would cause the steering lock to be engaged.

Front tow hook

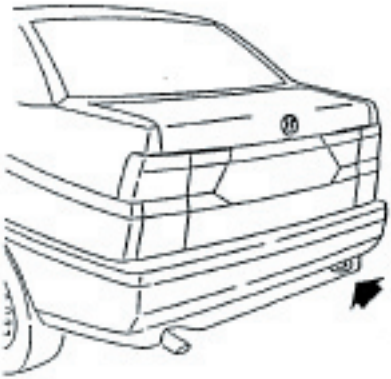

Rear tow hook

Alfawiki.nl

MAINTENANCE OPERATIONS

The maintenance operations consist in checking and restoring the efficiency of some parts of the vehicle subject to wear and misalignment following normal use. Below are given the tables showing the maintenance operations to be carried out at each vehicle service and the operations to be carried out at specified distances.

WARNING:
Precautions to be taken before carrying out any work: the engine compartment contains numerous moving parts, parts which reach high temperatures and high voltage cables which may constitute a danger.
The following indications must be respected:
– Switch off the engine and wait until it cools.
– Do not smoke or use naked flames. The presence of fuel could cause a fire.
– Ensure that a fire extinguisher is kept handy.

List of operations to be carried out after the first 1.500 km and before 2.500 km

1	Change oil, filter and check lubrication circuit.
2	Check sealing of fuel system.
3	Check exhaust smoke levels.
4	Check level of antifreeze mixture and check sealing of cooling circuit.
5	Check half-shaft and power steering bellows, and steering knuckle boots.
6	Check sealing of brake system.
7	Check level of brake and clutch fluid.
8	Check handbrake travel.
9	Test vehicle.

Alfawiki.nl

MAINTENANCE OPERATIONS (continued)

	Operations to be carried out at the specified distances	km x 1.000									
		20	40	60	80	100	120	140	160	180	200
1	Change engine oil and filter (at least once a year) and check sealing of lubrication circuit	Every 10.000 km									
2	Check valve clearance		●		●		●		●		●
3	Check condition and tension of Poly V alternator, water pump and power steering pump drive belt		●		●		●		●		●
4	Check air cleaner cartridge		●		●		●		●		●
5	Check level of antifreeze mixture	●	●	●	●	●	●	●	●	●	●
6	Check level of brake/clutch fluid	●	●	●	●	●	●	●	●	●	●
7	Check level of gearbox-differential oil (only versions with manual gearbox)		●		●				●		●
8	Change gearbox and differential oil (only versions with manual gearbox)						●				
9	Change gearbox-differential oil (only versions with automatic gearbox)		●		●		●		●		●
10	Check half-shaft and power steering bellows and steering knuckle boots	●	●	●	●	●	●	●	●	●	●
11	Check sealing of brake system	●	●	●	●	●	●	●	●	●	●
12	Check handbrake travel	●	●	●	●	●	●	●	●	●	●
13	Check level of power steering and self-levelling suspension system (if applicable)	●	●	●	●	●	●	●	●	●	●
14	Test vehicle	●	●	●	●	●	●	●	●	●	●

Alfawiki.nl

MAINTENANCE OPERATIONS (Continued)

For the vehicle to run smoothly the following recommendations should be followed:
Every 500 km (or when servicing) check:

- the engine oil level.
- the engine coolant level.
- the brake/clutch fluid level.
- the tyre pressures.
- the level of the windscreen/headlight washer/wiper fluid.

Engine oil and filter

These must be changed at the specified times.
If mileage is limited they should be changed once a year.

Air cleaner

When driving habitually on dusty roads the air cleaner must be checked more frequently than described.

Brake pads

On some versions brake pad wear is signalled by the illumination of a warning light on the instrument panel.
When substituting the front brake pads on vehicles fitted with wear sensors for the front brake pads only the rear pads should be checked at the same time.
The rear brake pads may not need replacing though, due to their function on the vehicle and should therefore be checked at a later date.

Brake/clutch fluid

The brake fluid is hygroscopic and absorbs humidity.
To avoid braking anomalies it should be replaced periodically regardless of the distance travelled.

Battery

The level of electrolyte in the battery should be checked regularly during periods of warm weather.

Air conditioner (if applicable)

Once a year, preferably at the beginning of the summer, the filter (if present) should be checked (more often when travelling regularly over dusty roads).

Antifreeze

The system should be topped up using Alfa Romeo Climafluid Permanent - 40°C antifreeze to preserve the protective characteristics of the mixture.

Notes

When the vehicle is being used in particular circumstances (for example when travelling on roads covered with salt and/or corrosive substances, on uneven roads etc.), check the half-shaft and steering bellows regularly and clean and lubricate the articulations, hinges and hooks on doors, bonnet, boot etc.
When obliged (in emergencies only) to use fuels, lubricants and/or fluids in general with characteristics which are not the same as those recommended by the manufacturer, these fluids and the relative filters should be replaced as soon as possible.

Alfawiki.nl

SCHEDULED SERVICING CHART

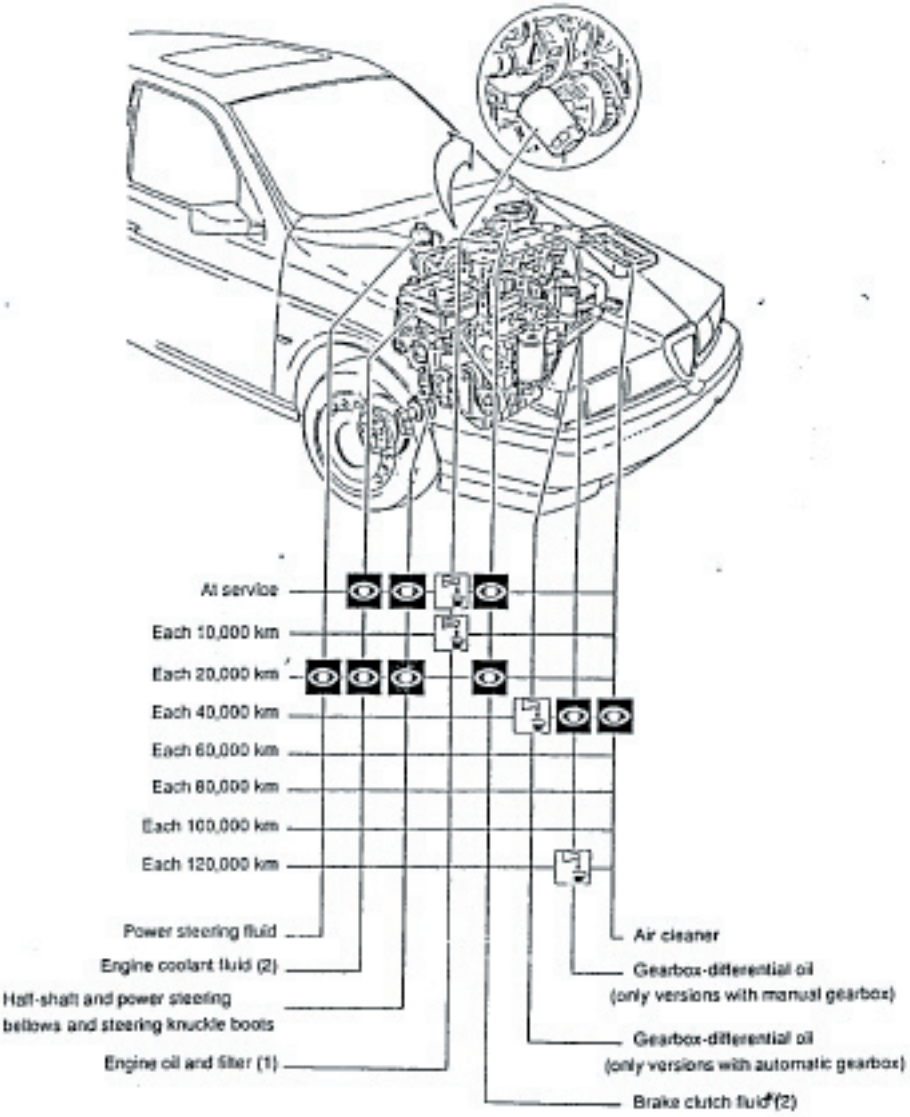

1. Replace at least once a year.
2. Carry out frequently when servicing.

Alfawiki.nl

FLUIDS AND LUBRICANTS

Type	Ref. Group	Application	Classification	Name
OIL	01 - Engine	Engine (Servicing)	API CD/SF CCMC PD2 SAE 15W/40	SELENIA TURBO DIESEL SYNTHETIC MOTOR OIL 15W/40
	13 - Gearbox and differential	Gearbox and differential (Servicing)	API GL-4	TUTELA ZC 80/S
	80 - Heating-ventilation	Compressor (Servicing)	—	Suniso 5GS
FLUID	07 - Engine cooling	Engine cooling - circuit (Servicing)	—	ALFA ROMEO CLUIMAFLUID PERMANENT -40°C
				ALFA ROMEO ANTIFREEZE (CONCENTRATED) (*)
	12 - Clutch	Hydraulic brake and clutch circuit (Servicing)	DOT 4 SAE J 1703 F	Alfa Romeo BRAKE FLUID SUPER DOT 4
	22 - Brakes			
	23 - Steering	Power steering system (Servicing)	G.M. DEXRON II	TUTELA GIA
	80 - Heating-ventilation	Air conditioning circuit (Servicing)	—	RIVOIRA Freon 12
GREASE	SEE SPECIFIC FUNCTIONAL GROUPS			

(*) Mixture composed of: 55% Alfa Romeo Antifreeze and 45% distilled water.

Alfawiki.nl

APPROXIMATE REFILL CAPACITIES

Refill capacity \ Version			155 TD 2.5
Fuel tank			6.3 litres
Fuel reserve			5 litres
Engine oil	total capacity: sump and filter + wells + radiator		7.2 litres (6.4 kg)
	Sump + filter + wells		6.7 litres (5.9 kg)
	Sump + filter (For periodical substitution)		6.3 litres (5.6 kg)
	Sump	at MAX level	6.0 litres (5.3 kg)
		at MIN level	4.0 litres (3.5 kg)
Gearbox - differential oil			2 litres (1.8 kg)
Oil for power steering system			(*)
Oil for brake-clutch circuit			(*)
Fluid for engine cooling system			11 litres
Oil for air conditioning compressor			(*)
Fluid for air conditioning system			(*)

(*): Data not available at time of printing.

Alfawiki.nl

ENGINE MAINTENANCE OPERATIONS

REPLACING ENGINE OIL AND FILTER

CAUTION:
Engine oil is harmful to the skin and all contact should be kept to a minimum. In case of contact wash off with soap and water.

- Place the vehicle on a lift.

1. When the engine is warm remove the filler cap.

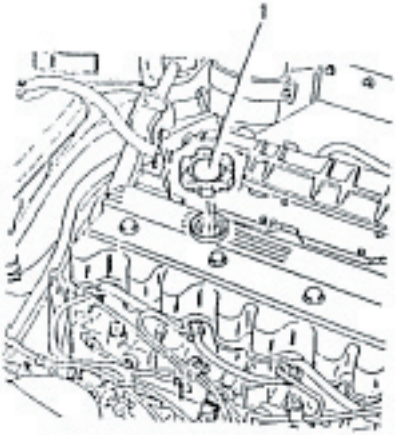

1. Pull out the dipstick.

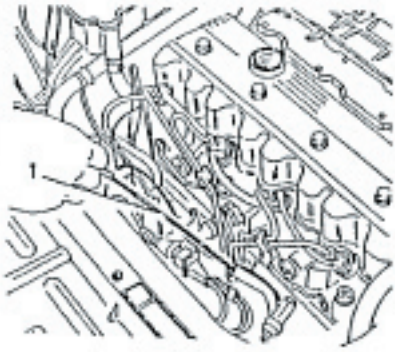

- Raise the vehicle.

1. Unscrew the drain plug and allow the oil to drain off for at least 15 minutes.

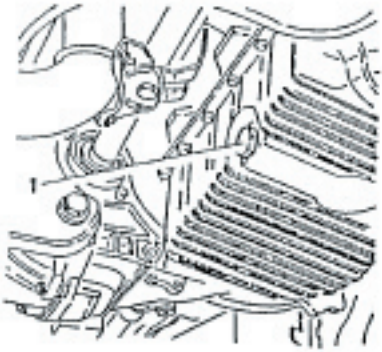

CAUTION:
Do not dispose of waste oil in the environment as this causes pollution. Find out where your local waste oil collection centre is.
The presence of a white substance is due to leakage of engine coolant into the oil.
Low viscosity is caused by dilution with fuel.

Alfawiki.nl

1. Using the appropriate tool unlock the filter and remove it.

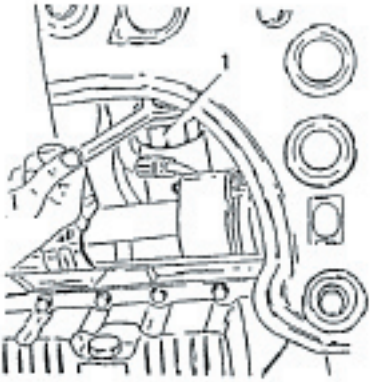

- Clean the drainage plug and tighten it on together with the relative gasket.
- Moisten the gasket of the new filter with oil and tighten it on by hand.
- Lower the vehicle.
- Refill the engine with the specified quantity and type of oil.
- Check the oil level using the dipstick.

CAUTION:
The oil level should be checked when the vehicle is on a level surface.
If the level of the oil exceeds the MAX mark this will cause excessive evaporation and a loss in oil pressure.

- Install the filler cap, run the engine at idle speed for about 2 minutes, switch off the engine and wait for a few minutes.
- Check the oil level and that there are no leaks.

CHECKING AND ADJUSTING VALVE CLEARANCE

- Position the vehicle on a lift.
1. Remove the front right-hand wheel.

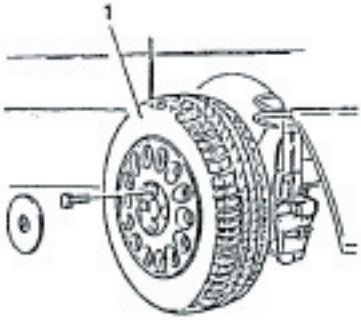

1. Remove the spray guard from the front-right hand wheel housing.

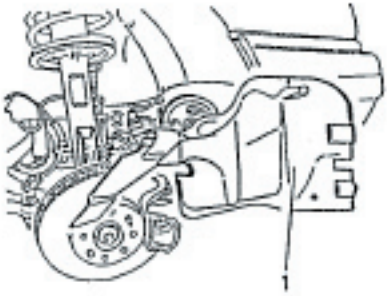

Alfawiki.nl

1. Loosen the clamp and disconnect the oil vapour recovery hose from the timing cover.

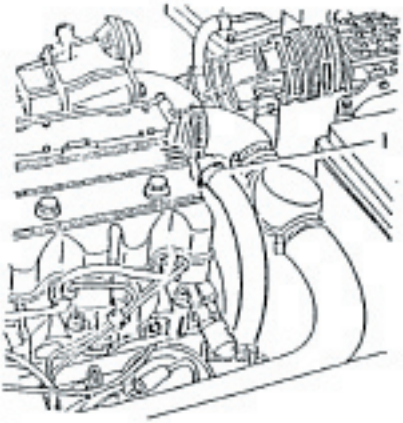

1. Unscrew the nuts securing the timing cover.

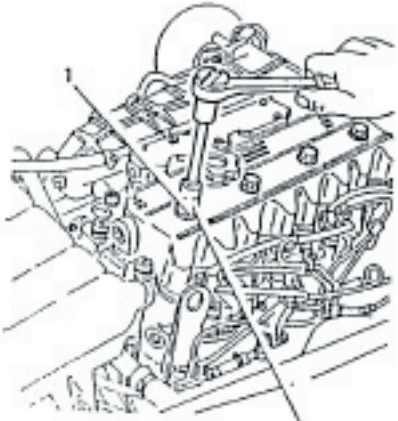

20 ÷ 25 Nm
2.0 ÷ 2.5 kgm

1. Remove the timing cover.
2. Remove the gasket.

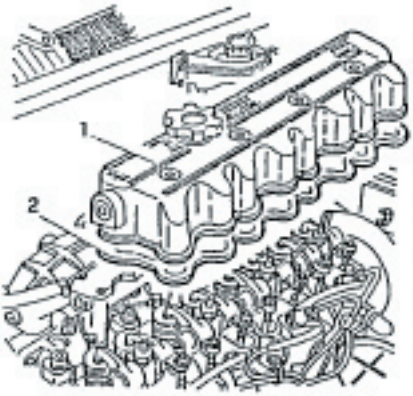

1. Using a suitable spanner applied to the nut of the auxiliary organs drive belt pulley, rotate the engine until the first cylinder is in the injection phase (valves closed).

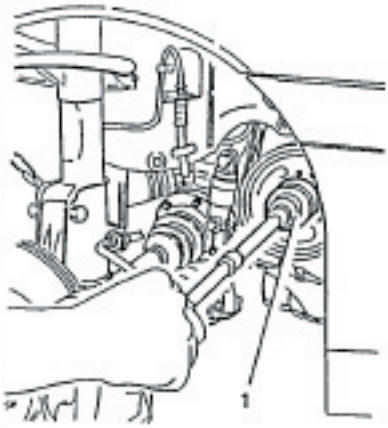

Alfawiki.nl

1. When the engine is cold, check that the clearance between rocker arms and valves is within the specified limits.

Valve clearance "G" (with engine cold)	
Intake	0.30 mm
Exhaust	0.30 mm

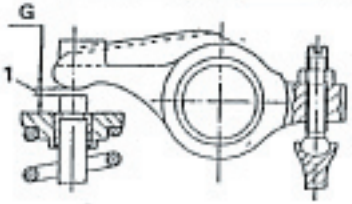

– If the valve clearance values do not correspond to those specified, proceed as follows:
1. Loosen the nut on the adjustment screw.
2. Adjust the adjustment screw by inserting a feeler gauge of the specified thickness between rocker arms and valves.

– Tighten the nut of the adjustment screw to the specified torque and check the clearance again.
– Check the valve clearance for the other cylinders each time rotating the crankshaft to bring the relevant cylinder to the injection phase (valves closed).

AUXILIARY ORGANS DRIVE BELT

Substitution

– Position the vehicle on a lift and raise it.
1. Remove the front right-hand wheel.

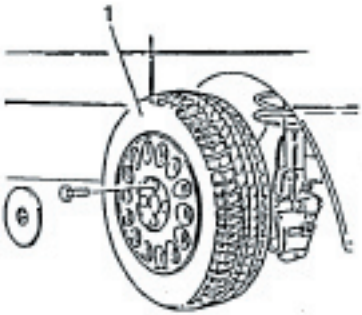

1. Remove the front right-hand wheel housing.

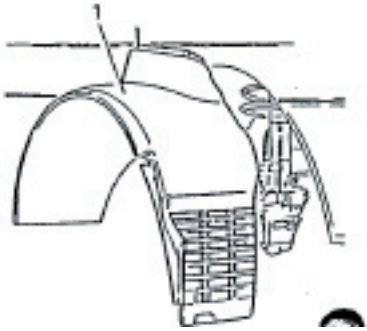

Alfawiki.nl

1. Remove the spray guard from the right-hand wheel arch.

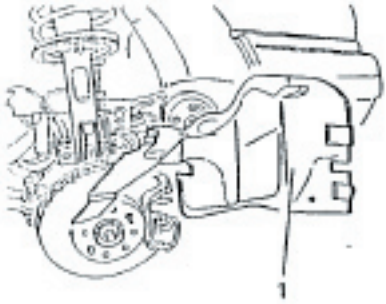

1. Loosen the screw (left-hand thread) securing the auxiliary organs drive belt tensioner pulley.

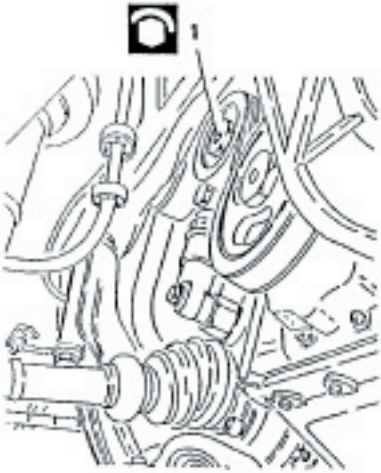

1. Install tool N° 1.820.270.000 and compress the belt tensioner shock absorber.
2. Pull off and remove the auxiliary organs drive belt.

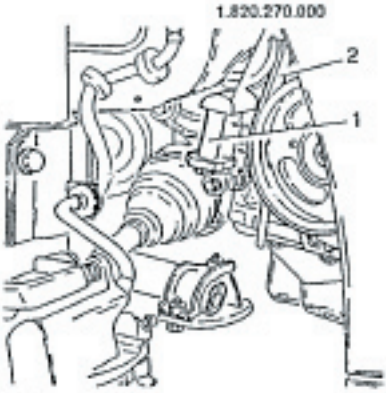

– Fit a new belt ensuring that the ribs are correctly arranged in their throats.

1. Remove tool N° 1.820.270.000 and free the belt tensioner shock absorber.

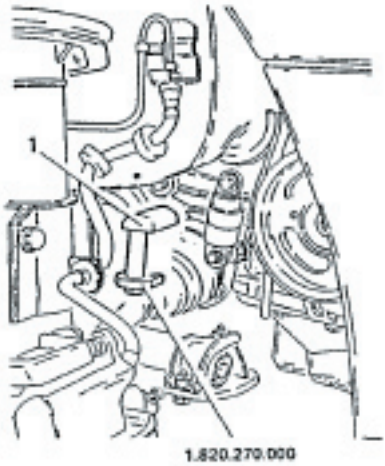

Alfawiki.nl

- Tighten the screw (left-hand thread) securing the belt tensioner pulley.
- Test out the belt by running the engine for a few minutes.
- Tighten the belt by operating as follows:

1. Loosen the screw (left-hand thread) securing the belt tensioner pulley.
2. Acting on the eccentricity hexagon on the pulley, rotate until an interaxis of 82 - 84 mm is obtained between the fulcrums of the shock absorber, controlled by tool N° 1.825.032.000.

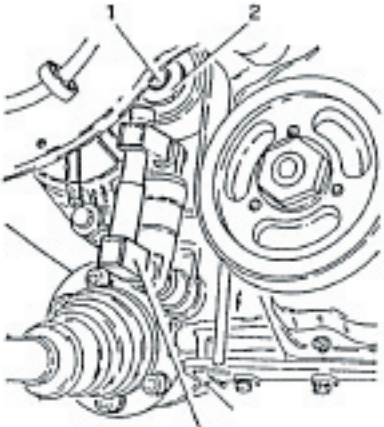

1.825.032.000

- Once this value has been obtained, tighten the screw (left- hand thread) to secure the belt tensioner pulley.
- Complete the refitting operations by reversing the procedure followed for removal.

CHECKING AND REPLACING AIR CLEANER CARTRIDGE

1. Disconnect the negative cable from the battery.

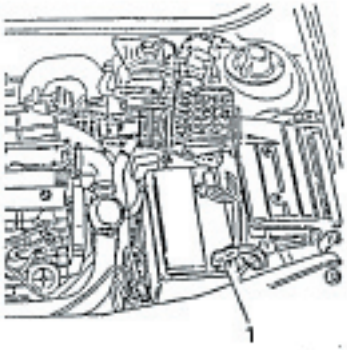

1. Unscrew the nut securing the air flow meter support bracket.
2. Loosen the clamp and disconnect the corrugated sleeve from the air flow meter.

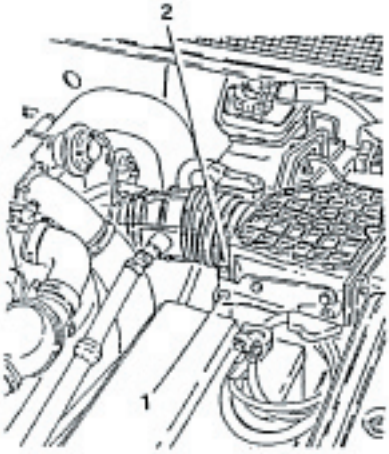

Alfawiki.nl

1. Disconnect the electrical connection from the air flow meter.

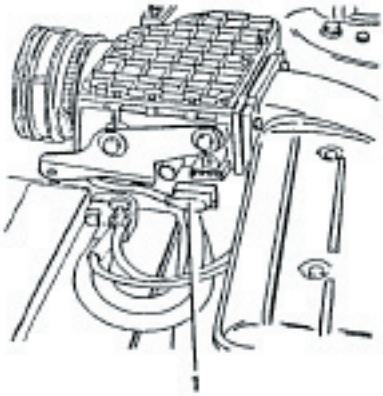

1. Unscrew the four screws from the air cleaner cover.

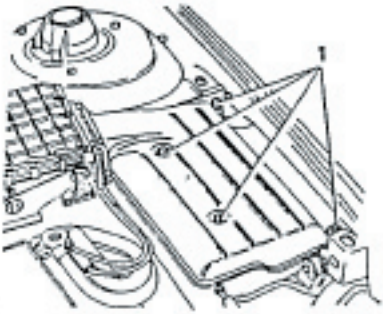

1. Raise the air cleaner cover and air flow meter assembly and tip it over to one side.

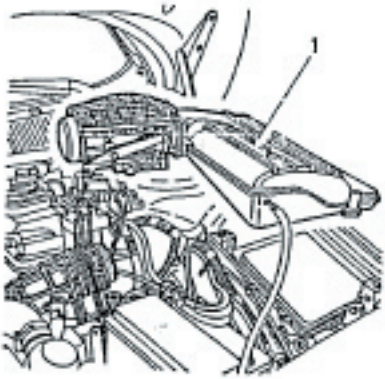

1. Remove the air cleaner cartridge.

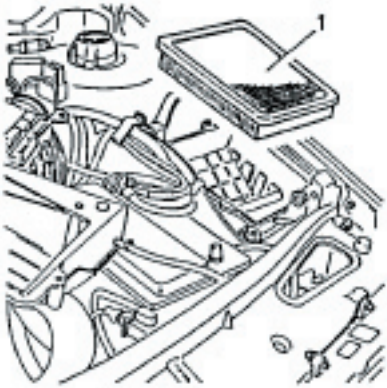

Alfawiki.nl

CAUTION:
Any cleaning operations may result in damage to the filter which would compromise the correct operation of the engine supply system.

- Carefully clean the air cleaner cartridge container.
- Check the conditions of the cartridge and, if necessary, replace it with a new one.

NOTE: If the filter shows signs of oil check for oil leaking into the air system.

- Refit the components by reversing the procedure followed for removal.

CHECKING EXHAUST SMOKE

- Start the engine and run to normal temperature.
1. Insert the exhaust gas sampling hose of the opacimeter into the exhaust pipe of the vehicle.

- Make the necessary connections and adjustments following the manufacturer's recommendations.
- Press the accelerator pedal to the floor three times until full output is reached or until the revs limitation device cuts in.
- Carry out measurements after 5 successive accelerations and note down the maximum values obtained.
- To reach the test value, take an arithmetical average of the three values which are the closest to each other.

NOTE: If more than one group of three values is available choose the one with the highest average value.

- Check that the smoke levels are within the specified limits.

Limits for exhaust smokiness
≤ 40 %

- If the smoke value is above the specified value the following tests must be carried out:
  - check conditions of air cleaner;
  - check timing of injection pump;
  - check valve clearance and timing;
  - checking calibration and cleanliness of injectors;
  - check compression ratio.
- If smoke levels cannot be reduced by these methods the injection pump must be overhauled.

Alfawiki.nl

ENGINE COOLING SYSTEM PRESSURIZED CAP SEALING TEST

1. Screw the union onto the lower tip of the test instrument.
2. Install the pressurized cap from the expansion tank onto the union.
3. Manually work the piston to build up pressure and check that the valve on the cap opens at the specified pressure.

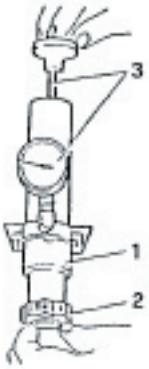

Calibration pressure of the pressurized cap
0.98 ± 0.1 bar (1 ± 0.1 kg/cm²)

ENGINE COOLING SYSTEM SEALING TEST

- Unscrew and remove the pressurized cap from the expansion tank.
1. Screw the seal test instrument, fitted with a suitable connection, onto the neck of the expansion tank.
2. Manually pressurize the circuit and check that the pressure is kept at the prescribed level, if this is not the case, check that there are no leaks from the sleeves or from the radiator.

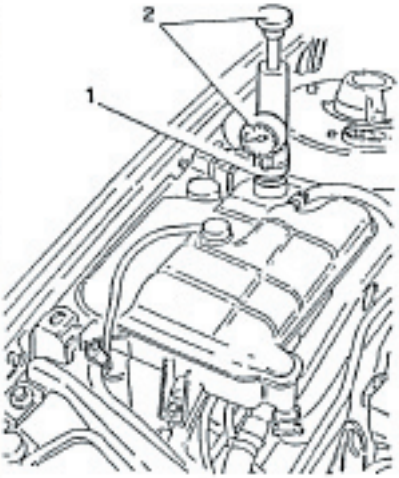

Hydraulic circuit control pressure
1.08 bar (1.1 kg/cm²)

CAUTION:
For safety reasons when using the test apparatus do not allow the pressure to exceed 1.38 bars (1.4 kg/cm²).

Alfawiki.nl

CHECKING LEVEL AND REPLACING ENGINE COOLANT FLUID

Check

1. When the engine is cold visually check that the level of engine coolant reaches the notch (shown by the arrow in the diagram) on the expansions tank and if not refill with the specified fluid.

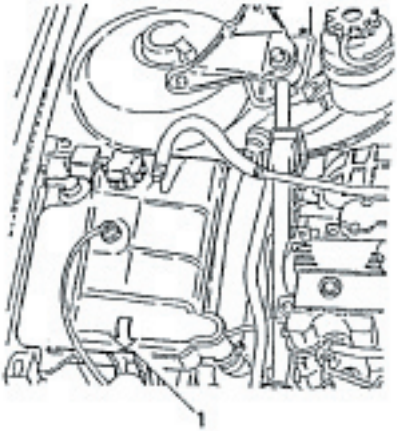

Substitution

- Place the vehicle on a lift.
- Unscrew and remove the cap from the expansion tank.

CAUTION:
Never remove the cap from the expansion tank when the engine is hot!

- Raise the vehicle.
1. Drain off the engine coolant into a suitable container by disconnecting the radiator outlet hose.

CAUTION:
The antifreeze mixture used as an engine coolant is harmful to paintwork.

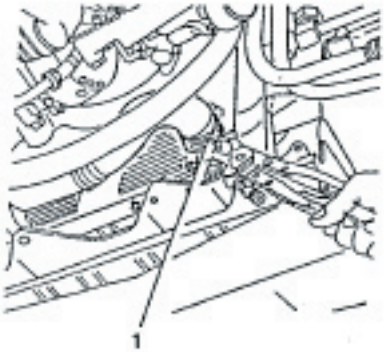

- Connect the sleeve to the radiator and any other hoses which have been disconnected and check that all the clamps are tight.
- Refill the system until the notch on the expansion tank is reached.
- The indicative quantity and quality of the engine coolant is given in the following table.

Minimum temperature: -40°C		
Concentrated antifreeze	Alfa Romeo Antifreeze	6 l (55%)
Distilled water		5 l (45%)
Ready for use antifreeze	Alfa Romeo Climafluid Permanent -40°C	11 l

Alfawiki.nl

- Start the engine and run it to normal operating temperature until the thermostat opens to eliminate residual air from the circuit.

1. When the engine is cold, top up until the until the reference notch on the expansion tank is reached.
2. Screw the pressurized cap onto the expansion tank.

CAUTION:
It is not advisable to mix antifreeze products of different types or makes.
Do not use anti-rust additives as this may be incompatible with the antifreeze in use.

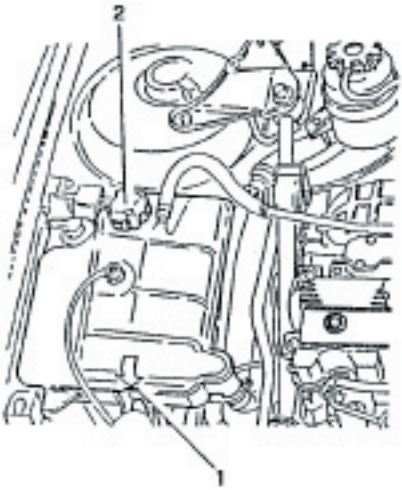

MAINTENANCE OF MECHANICAL UNITS

As for 155 V6.

Alfawiki.nl

TECHNICAL CHARACTERISTICS AND SPECIFICATIONS

VALVE CLEARANCE

NOTE: Check/adjust valve clearance only when engine is cold

Valve clearance	Intake	0.30 mm
	Exhaust	0.30 mm

CHECKING EXHAUST SMOKE

Limits of smokiness	≤ 40 %

COOLING SYSTEM

Control pressure of hydraulic circuit	1.08 bar (1.1 kg/cm^2)
Calibration pressure of pressurized cap	0.98 ± 0.1 bar (1 ± 0.1 kg/cm^2)

TIGHTENING TORQUES

ENGINE

Part	Nm	kgm
Nut securing timing cover	20 ÷ 25	2.0 ÷ 2.5
Nuts securing rocker arm clearance registration screws	23 ÷ 29	2.4 ÷ 2.9

SPECIFIC TOOLS

1.820.270.000	Auxiliary organs drive belt tensioner shock absorber compression tool
1.825.032.000	Gauge for checking auxiliary organs control belt tensioner shock absorber

Alfawiki.nl

SERVICE

DIREZIONE POST-VENDITA
SERVIZI ASSISTENZIALI
Viale Alfa Romeo 20020 Arese (MI)
Fiat Auto S.p.A.

Pubblic. PA4736034X4002 - 5/95
Printed in Italy by Tip. Bogliani - Torino
n. 60494494

All rights reserved.
Reproduction, even partial, without the express permission in writing from Fiat Auto S.p.A. is prohibited

Alfawiki.nl

155
T.SPARK 16V

REPAIR MANUAL

VEHICLE CHARACTERISTICS AND MAINTENANCE

Alfa Romeo

Alfawiki.nl

12-1994

UPDATES CARD

155 T.S.-AFK 16V

REPAIR MANUAL

- **VEHICLE CHARACTERISTICS AND MAINTENANCE**

UPDATES CARD			
UPDATE (DATE)	SECTION	PAGE	
		REMPLACED	ADDED
	Vehicle characteristics and maintenance (PA4655A516V000)		
2(12/1995)		00-1 ÷ 00-4	
2(12/1995)		00-6	
1(1/1995)		00-16	
1(1/1995)			00-17 ÷ 00-28
2(12/1995)		00-18	
2(12/1995)		00-20	
2(12/1995)		00-20/1 ÷ 00-20/2	
2(12/1995)		00-22	
2(12/1995)		00-28	

Insert this Update Card in volume " 155 Repair Manual - Vehicle Characteristics and Maintenance" at the beginning of the section concerning 155 T.S.-AFK 16V

Alfawiki.nl

GROUP 00

VEHICLE CHARACTERISTICS AND MAINTENANCE

INDEX

DIMENSIONS ..... 00 - 2
WEIGHTS AND LOADS ..... 00 - 3
WHEELS AND TYRES ..... 00 - 4
MODEL IDENTIFICATION ..... 00 - 5
– Identification plates ..... 00 - 5
– Identification label ..... 00 - 6
– Data plate ..... 00 - 7
– Paint identification plate ..... 00 - 7
SPECIFIC TOOLS ..... 00 - 8
– Generalities ..... 00 - 8
VEHICLE LIFTING POINTS ..... 00 - 8
VEHICLE TOWING POINTS 00-11
SERVICING OPERATIONS 00-12
– Schedules checks and servicing operations 00-14
FLUIDS AND LUBRICANTS 00-15
APROXIMATE SERVICING CAPACITIES 00-16
SPECIFIED FUEL 00-16
ENGINE MAINTENANCE OPERATIONS 00-17
– Changing the engine oil and filter 00-17
– Changing the timing gear belt (for engines with counter-rotating shafts) 00-18
– Changing the timing gear belt (for engines without counter-rotating shafts) 00-18
– Auxiliary component belt 00-20/2
– Changing the air claner cartridge 00-21
– Changing the fuel filter 00-21
– Checking and changing spark plugs 00-22
– Checking the level and changing the engine coolant fluid 00-23
MAINTENANCE OF MECHANICA UNITS 00-24
– Checking for damage of the halfshaft, power steering bellows and steering knuckles 00-24
- Drive shafts 00-24
- Steering rods 00-24
– Checking handbrake travel 00-24
– Braking circuit sealing test 00-25
– Checking the level of the clutch/brake fluid 00-26
– Checking power steering fluid 00-26
– Checking the level and changing gearbox/differential oil 00-27
TECHNICAL CHARACTERISTICS AND SPECIFICATIONS 00-28
– Spark plugs 00-28
– Tightening torques 00-28
SPECIAL TOOLING 00-28

Alfawiki.nl

DIMENSIONS

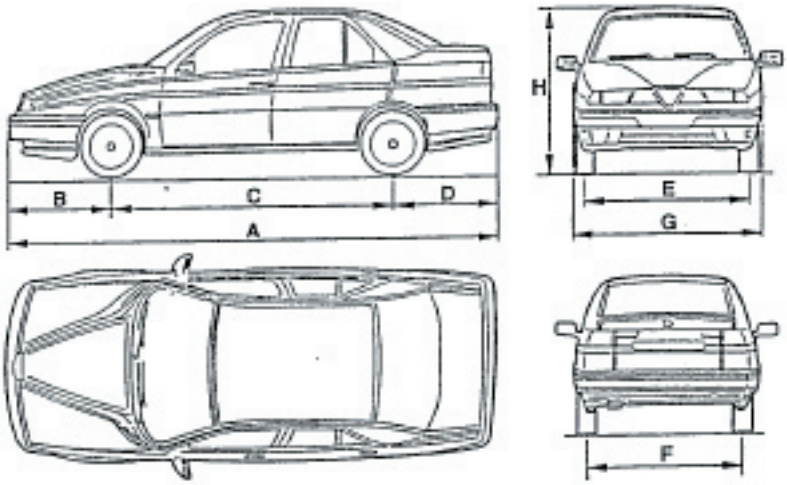

Dimensions		Model	155 1.6 T. SPARK 16V	155 1.8 T. SPARK 16V	155 2.0 T. SPARK 16V	155 SUPER T. SPARK 16V
A	Maximum length	mm	4443	4443	4443	
B	Front overhang	mm	960	960	960	
C	Wheelbase	mm	2540	2540	2540	
D	Rear overhang	mm	943	943	943	
E	Front track (with static load)	mm	(*)	(*)	1493 (1) 1485 (2)	
F	Rear track (with static load)	mm	(*)	(*)	1427 (1) 1419 (2)	
G	Maximum width	mm	1730	1730	1730	
H	Maximum height	mm	1440	1440 1425 (3)	1440 1425 (3)	

(1): with 15" rims
(2): with 16" rims
(3): with lowered geometry

(*): Not available at time of going to press.

Alfawiki.nl

WEIGHTS AND LOADS

Weights and loads \ Model			155 1.6 T. SPARK 16V	155 1.8 T. SPARK 16V	155 2.0 T. SPARK 16V	155 SUPER T. SPARK 16V
Kerb weight (without driver)		kg	1270	1270	1300	
Weight of vehicle fully laden		kg	(*)	(*)	1840	
Useful load		kg	(*)	(*)	540	
Max. permissible weight for axle	front	kg	(*)	(*)	900	
	rear	kg	(*)	(*)	940	
Towable weight	with braked trailer	kg	1300	1300	1300	
	with unbraked trailer	kg	500	500	500	
Maximum load on tow hitch ball		kg	50	50	50	

(*): Not available at time of going to press.

Alfawiki.nl

WHEELS AND TYRES

Specifications	Model	155 1.6 T. SPARK 16V	155 1.8 T. SPARK 16V	155 2.0 T. SPARK 16V	155 SUPER T. SPARK 16V
Rim size	standard	6J x 14"	6J x 14"	6.5J x 15"	6.5J x 15"
	optional	-	6.5J x 15" 7J x 16"	-	7J x 16"
Tyre size	standard	185/60 HR14" (▲) 195/60 VR14"	195/55 VR15" (▲) 185/60 HR14" 195/60 VR14"	195/55 VR15"	205/50 VR15"
	optional	-	205/50 VR15" 205/45 ZR16"	-	205/45 ZR16"
Tyre pressure bar (kg/cm²)	reduced load (2 persons)	(*)	(*)	front 2.2 rear 2.0	front 2.5 rear 2.3
	fully laden	(*)	(*)	front 2.5 rear 2.5	front 2.8 rear 2.5
Compact spare wheel	rim size	4J x 15" 4B x 15"	4J x 15" 4B x 15"	4J x 15" 4B x 15"	4J x 15" 4B x 15"
	tyre size	115/70 R15" 90M	115/70 R15" 90M	115/70 R15" 90M	115/70 R15" 90M
	tyre pressure bar (kg/cm²)	4.2	4.2	4.2	4.2

(*): Not available at time of going to press.
(▲): For Versions/Markets.

WARNING:
In the event of continued driving at top speed, the pressures should be increased by 0.3 bar.

NOTE: To improve coupling between the wheels and the car body, the rims have a specific camber of each rim size. Therefore, in addition to the correct rim and tyre match, it is also necessary to check and maintain the camber of the rim.

RIM SIZE	RIM CAMBER
6J x 14"	31.5 mm
6.5J x 15"	37 mm
7J x 16"	41 mm

Alfawiki.nl

MODEL IDENTIFICATION

IDENTIFICATION PLATES

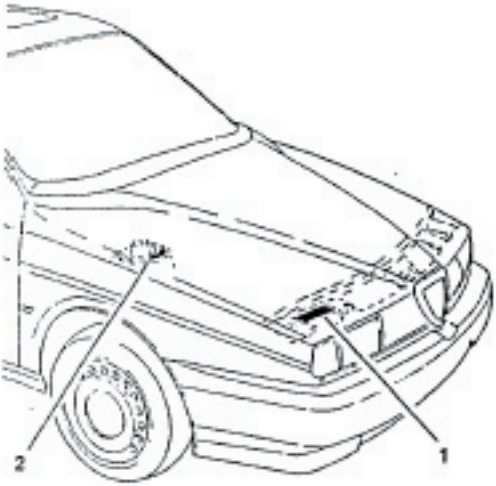

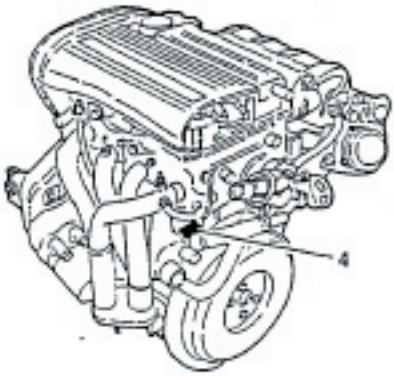

1. *Data plate*
2. *Body code*
3. *Paint identification plate*
4. *Engine code (on crankcase)*

Alfawiki.nl

IDENTIFICATION LABEL

Model		155 2.0 T. SPARK 16V	155 SUPER T. SPARK 16V
Trim level		4-door saloon	
Drive		LH + RH	
N° version	on identification label	167A2G	
	in the engine, compartment to one side of the right-hand upper shock absorber connection	167000	
N° chassis serial number (on two assembly lines)		121000 1022000	
N° engine type & serial number (intermittent)		AR 67204 from 3259	

Model		155 1.6 T. SPARK 16V	155 1.8 T. SPARK 16V
Trim level		4-door saloon	
Drive		LH + RH	
N° version	on identification label	167A6 167A6A (▲)	167A4N 167A4P (▲)
	in the engine, compartment to one side of the right-hand upper shock absorber connection	167000	167000
N° chassis serial number (on two assembly lines)		(*)	(*)
N° engine type & serial number (intermittent)		AR 67601 from (*)	AR 67105 from (*)

(*): Not available at time of going to press.

(▲): For Vesions/Markets.

Alfawiki.nl

DATA PLATE

This is located on the engine compartment crossmember.
It contains the data listed below:

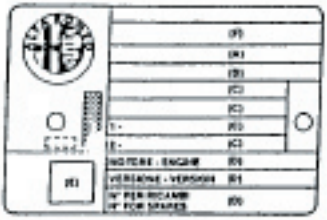

A. National homologation number
B. Chassis serial number
C. Any maximum weights authorized by different national regulations
D. Vehicle version code (for example 167A2G) and any supplementary information.
E. Smoke opacity index
F. Name of manufacturer

PAINT IDENTIFICATION PLATE

This is located on the inner part of the bonnet and contains the data given below:

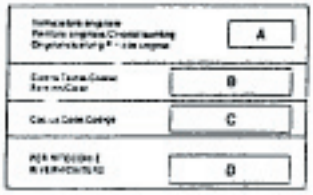

A. Paint manufacturer
B. Colour name
C. Colour code
D. Colour code for touch-up or respray

Alfawiki.nl

SPECIFIC TOOLS

GENERALITIES

Specific tools play an important part in vehicle maintenance as they are able to guarantee accurate, reliable and quick service.
It should be noted that the times for the various operations have been calculated considering the use of the specific tools.
This manual lists and illustrates the special tools designed expressly by the Manufacturer for overhauling, maintenance and repair operations on the vehicle.
The tool code is formed of a new number with 10 digits and an old number with 1 letter and 5 digits.

Es.: 1.820.088.000
(A.2.0461)

Tools manufactured recently only have the new number.
The service network can supply particular specific tools, through Alfa Romeo Dealers following the existing procedures.

VEHICLE LIFTING POINTS

Use of the jack supplied with the vehicle

- If it is necessary to raise the vehicle using the car jack, place it in one of the points (A) shown in the illustration.

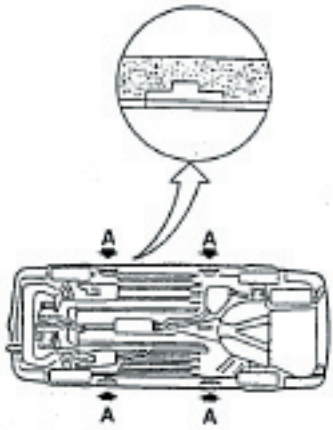

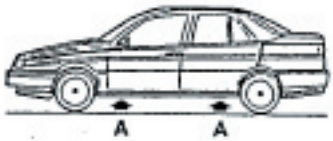

NOTE: These lifting points, two for each side of the car, are shown by an arrow on the underdoor strips.

CAUTION:
Be careful to insert the groove of the upper part of the jack correctly on the protruding profile of the body.

Alfawiki.nl

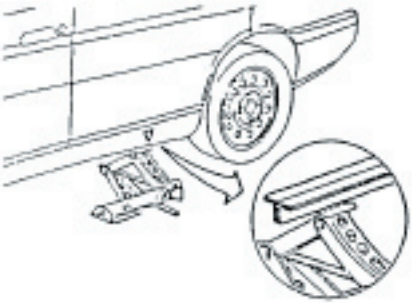

CAUTION:

- After raising the car with the jack, it must be supported by suitable safety stands.
- Before lifting the front of the vehicle, lock the rear wheels remaining on the ground using chocks; in the same way, when lifting the rear of the vehicle, chock the front wheels.
- NEVER CARRY OUT ANY WORK UNDER A VEHICLE LIFTED WITH THE CAR JACK !! THE JACK IS ONLY TO BE USED FOR CHANGING WHEELS.

Use of a workshop jack

- When needing to lift the car using a workshop jack, a suitable tool should be placed between arm of the jack and the vehicle body.
  The tool must be made of steel and with the dimensions illustrated.

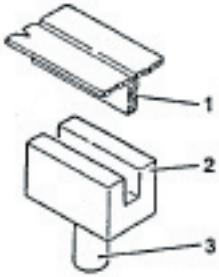

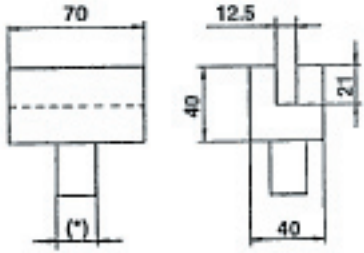

(*) dimension depending on the seat of the hydraulic jack used

1. *Body*
2. *Tool*
3. *Centering pin*

Alfawiki.nl

1. Position the tool described previously on the hydraulic jack.
2. Place the jack in one of the points shown previously.

NOTE: These lifting points, two for each side of the car, are shown by an arrow on the under-door strips.

CAUTION:
Be careful to correctly insert the groove of the tool on the protruding profile of the body.

CAUTION:
- After lifting the vehicle with the jack, support it with suitable safety stands.
- Before lifting the front of the vehicle, lock the rear wheels remaining on the ground using chocks; in the same way, when lifting the rear of the vehicle, chock the front wheels.

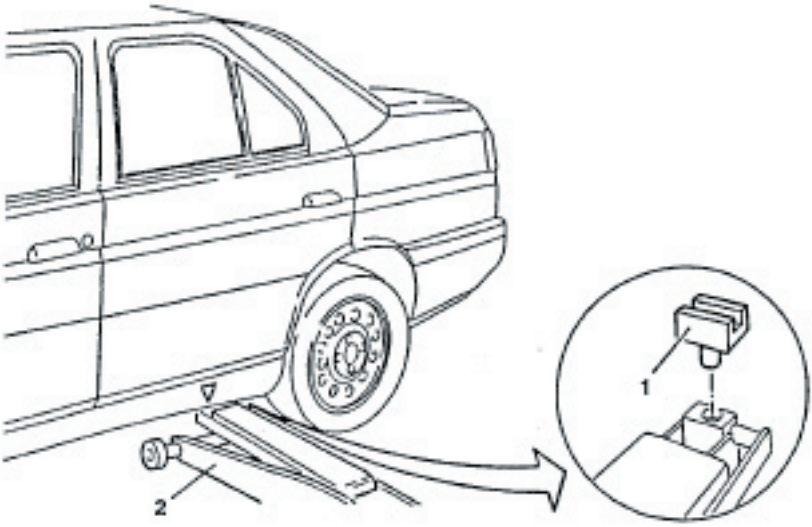

Alfawiki.nl

VEHICLE TOWING POINTS

The car has two two hooks (front and rear) located on the right- hand side of the bumpers.
When towing the vehicle, drive with care and closely adhere to current regulations.

- When needing to tow the car, fit the towing system in points (B) illustrated.

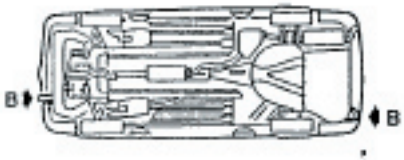

CAUTION:

- **Before towing the car turn the ignition key to MARCIA, and then back to STOP without removing it; this wheel prevent the steering lock from engaging accidentally.**
- **You are reminded that when the vehicle is being towed the servobrake and power steering system are NOT operational !!**

- Front tow hook

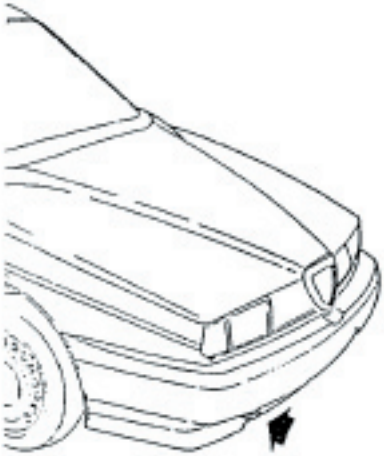

- Rear tow hook

Alfawiki.nl

SERVICING OPERATIONS

The maintenance operations consist in checking and restoring the efficiency of certain parts of the vehicle subject to wear and phase displacement following normal use.

The table below lists the servicing operations to be carried out at the specified mileage.

WARNINGS:

Precautions to be observed before doing any work.

The engine compartment contains many moving parts, high voltage cables and parts which become extremely hot and might be dangerous.

Carefully adhere to the following instructions:

- **Turn off the engine and wait for it to cool down.**
- **Do not smoke or use naked flames. The presence of fuel may cause a fire.**
- **Keep a fire extinguisher handy.**

Operations to be carried out at the mileage shown	km x 1000									
	20	40	60	80	100	120	140	160	180	200
Changing engine oil and filter (at all events once a year) and checking lubrication circuit for leaks	●	●	●	●	●	●	●	●	●	●
Changing timing gear drive belt						●				
Checking conditions of Poly V belts				●				●		
Changing air cleaner cartridge		●		●		●		●		●
Changing fuel filter cartridge (petrol versions)				●				●		
Checking operation of exhaust gas (Lambda probe) oxygen sensor				●				●		
Changing spark plugs					●					●
Changing antifreeze mixture				●				●		
Checking gearbox and differential oil level (only versions with manual gearbox)				●				●		
Checking conditions of protective bellows for axle shafts, power steering and steering knuckle caps		●		●		●		●		●
Checking brake and fuel circuits for leaks		●		●		●		●		●
Checking handbrake travel		●		●		●		●		●
Checking power steering oil level		●		●		●		●		●

Alfawiki.nl

SERVICING OPERATIONS (Continued)

To keep the car in good operating conditions, the following recommendations should be adhered to carefully:

Every 500 kms (or when refuelling) check:
- the engine oil level.
- the level of the fluid in the coolant circuit.
- the level of the brake/clutch fluid.
- the tyre pressures.
- the level of the fluid in the windscreen washer system.

Engine oil and filter
To be changed at the specified intervals.
At all events, they must be changed once a year.

Air cleaner
If the car is habitually used on dusty roads, the air cleaner should be changed more often than specified.

Brake pads
Wear of the brake pads is indicated by the turning on of a warning light on the instrument cluster.
When changing the pads, also check the rear ones.
However, depending on the use of the car, the rear pads might not need to be changed immediately, in which case, you are recommended to check them at a later stage.

Brake and clutch fluid
The brake fluid is hygroscopic, i.e. it absorbs moisture.
To avoid faulty braking, change the brake fluid every two years, regardless of the mileage driven.

Battery
During hot weather, check the electrolyte level frequently.

Dust and/or pollen filter (if fitted)
Once a year, preferably at the beginning of summer, have the conditions of the dust and/or pollen filter (if fitted) checked by the Alfa Romeo Service Network.
If the car is mostly used for town/motorway driving or on dusty roads, it is wise to check more often than indicated.
Warning: Failure to change the filter can considerably reduce the performance of the air conditioner system.

Anti-freeze
It is advisable to top up with **Alfa Romeo Climafluid Super Permanent -40°C** to conserve the protective properties of the mixture.

Notes
Under special driving conditions (e.g. on roads sprinkled with antifreeze salt and/or corrosive substances, rough road surfaces, etc.) often check the boots of the axle shafts and steering box, and clean and lubricate joints, hinges, door catches, bonnet catch, etc.)
When forced to use fuel, lubricants and/or fluids in general with characteristics other than those specified by the manufacturer (in emergencies), replace the fluids and corresponding filters at the earliest opportunity.

Alfawiki.nl

SCHEDULED CHECKS AND SERVICING OPERATIONS

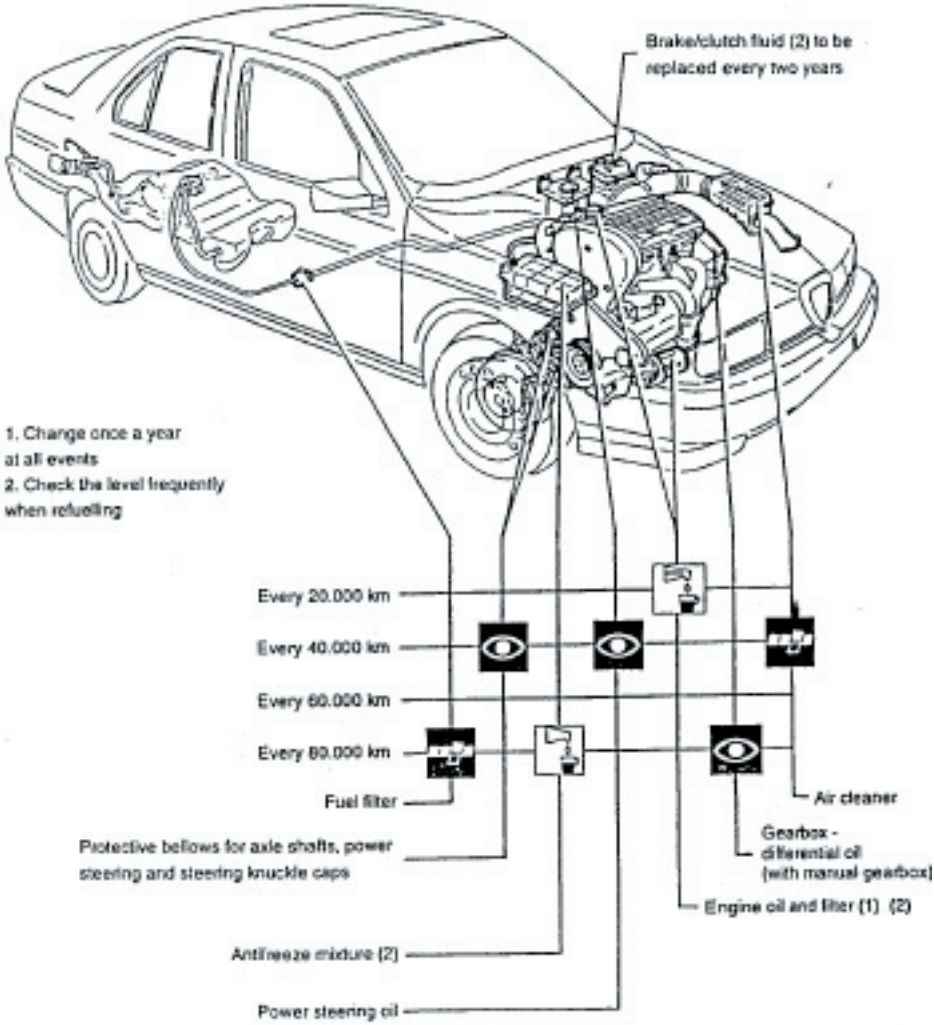

Alfawiki.nl

FLUIDS AND LUBRICANTS

Type	Group ref.	Application	Classification	Name
OIL	01 - Engine (*)	Engine (Refilling)	API SG CCMC G5 SAE 10W/40	SELENIA SPECIAL FORMULA ALFA ROMEO 10W/40
	13 - Gearbox and differential	Gearbox and differential (Refilling)	API GL-4	TUTELA ZC 80/S
	80 - Climate control	Compressor (Refilling)	–	NIPPONDENSO ND-9
FLUID	07 - Engine cooling	Cooling circuit (Refilling)	–	ALFA ROMEO CLIMAFLUID SUPER PERMANENT -40°C
	12 - Clutch	Brake and clutch hydraulic circuit (Refilling)	DOT 4 SAE J1703 F	ALFA ROMEO BRAKE FLUID SUPER DOT 4
	22 - Brakes			
	23 - Steering	Power steering system (Refilling)	G.M. DEXRON II	TUTELA G9/A
	80 - Climate control	Air conditioner circuit (Refilling)	–	RIVCIRA: SUVA R134a HOECHST - TAZZETTI: FRIGEN R134a ICI - TAZZETTI: KLEA R134a
GREASE	SEE SPECIFIC FUNCTIONAL GROUPS			

(*): For decidedly sportive use of the vehicle, fully synthetic SELENIA Racing 10W/60 engine oil is recommended.

Alfawiki.nl

APPROXIMATE SERVICING CAPACITIES

Capacity \ Model		155 2.0 T. SPARK 16V	155 SUPER T. SPARK 16V
Fuel tank		63 litres	
Fuel reserve		~ 5 litres	
Engine oil	Total capacity	5.0 litres	
	Partial capacity (filter + sump) for periodical replacement	4.4 litres	
Gearbox - differential oil		2 litres	
Power steering system oil		(1)	
Brake - clutch circuit oil		(1)	
Engine cooling system fluid		8.4 litres	
Conditioner compressor oil		290 ± 30 cm^3 (2)	
Conditioner system fluid		(1)	

(1): Data not available at time of going to press.
(2): When changing components:
- the compressor is supplied with 160 ± 20 cm^3 of oil
- the drier filter is supplied with 130 ± 10 cm^3 of oil

SPECIFIED FUEL

The octane number of a fuel defines its resistance to detonation : it is essential to use fuel with the correct octane number as this will prevent knocking which may prove dangerous for the engine.
The higher the octane number the greater the anti-detonation capacity.

The 155 model has been designed to run ion unleaded petrol with an octane number of 95 RON (Research Octane Number).
These vehicles are all fitted with a catalytic converter.
To enable this to operate with the highest degree of efficiency, unleaded petrol must be used as the lead deposits contained in other fuels build up on the surface of the catalyst and prevent it from working properly.
The size of the filler neck has been reduced to prevent the nozzles used on leaded petrol pumps from being inserted.

Alfawiki.nl

ENGINE MAINTENANCE OPERATIONS

CHANGING THE ENGINE OIL AND FILTER

WARNING:
Engine oil is harmful to the skin: minimise contact of the oil with the skin; if this does occur wash with soap and water.

1. With the engine warm, remove the filler cap.
2. Withdraw the dipstick.

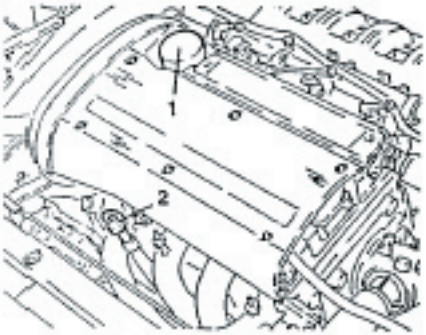

- Raise the car.
1. Remove the drain plug and drain off all the oil into a suitable recipient.

WARNING:
Be very careful when removing the drain plug; the oil might be very hot.

WARNING:
Never discard the oil in the environment as indiscriminate dumping causes pollution.

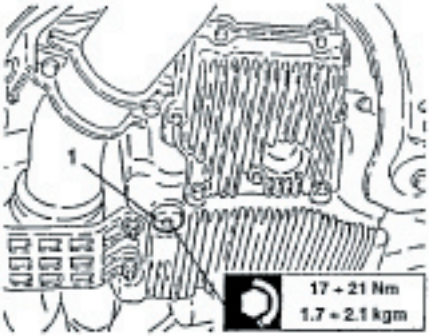

1. Working from underneath the car with the appropriate wrench, release the oil filter and remove it.

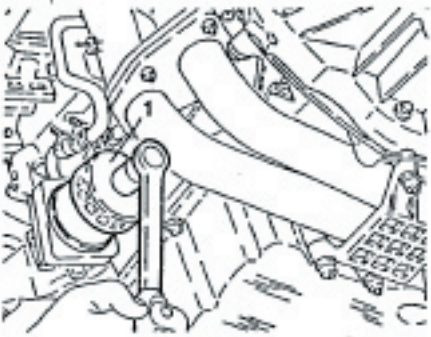

- Clean the drain plug and tighten it with the seal to the specified torque.
- Moisten the seal of the new filter and screw it on tightening fully by hand.
- Lower the car.
- Replenish the engine with oil of the type and in the quantity specified.
- Check that the oil level is correct with the dipstick.

WARNING:
The oil level should be checked with the car on level ground.
The oil level above the MAX mark can cause the oil to evaporate and loss of pressure.

Alfawiki.nl

- Refill the filler cap, run the engine for appr. 2 minutes at idle speed, turn off the engine and wait for a few minutes.
- Check the oil level and make sure there are no leaks.

WARNING:
When refilling with oil, great care should be taken to prevent engine oil dripping into the alternator ventilation holes, as this could seriously damage the alternator and may cause fire.

CHANGING THE TIMING GEAR BELT (For engines with counter-rotating shafts)

- Set the car on a lift.
- Disconnect the battery (-) terminal.
- Remove the right front wheel and mud flap.

1. Working as illustrated on the guide pulley, slacken the tension of the auxiliary components control belt and remove it.
2. Slacken the four fastening screws and remove the auxiliary components control belt.

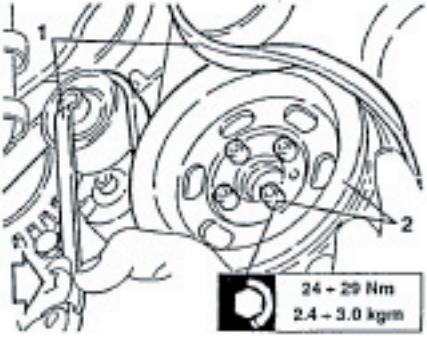

1. Slacken the fastening screw and remove the auxiliary components control belt guide pulley.
2. Slacken the fastening screw and remove the auxiliary components belt tensioner.

3. Slacken the fastening screws and remove the timing belts and counter-rotating shafts lower guard.

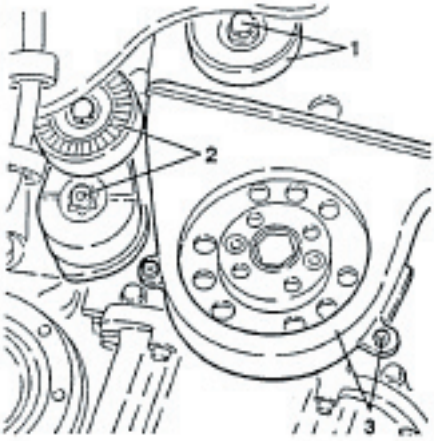

- Slacken the lower screws of the timing belts and counter-rotating shafts upper guard.

1. Lower the car, slackening the remaining fastening screws and remove the upper guard.

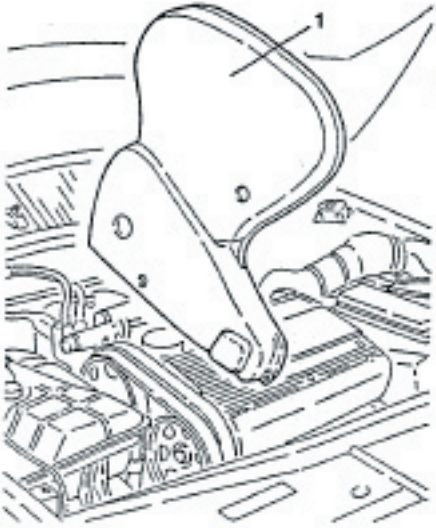

Alfawiki.nl

1. Slacken the tension of the counter-rotating shafts belt loosening the nut fastening the corresponding belt tensioner, then remove the belt.

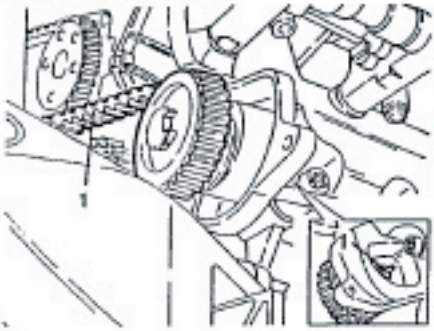

1. Slacken the two fastening screws and remove the counter-rotating shafts driving pulley.

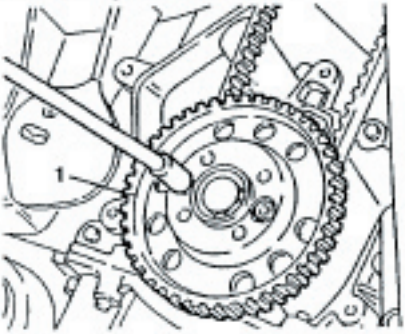

1. Slacken the fastening screws and remove the cover of the ignition coils.
2. Disconnect the electrical connections from the ignition coils.

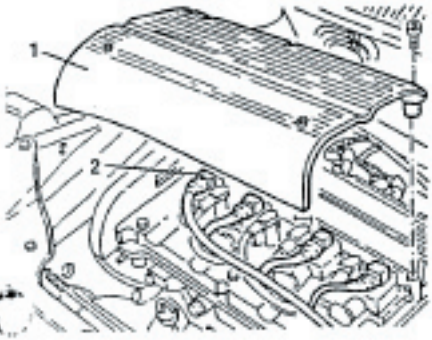

1. Slacken the fastening screws and remove the ignition coils.
2. Slacken the fastening screws and remove the ignition coils support bracket.

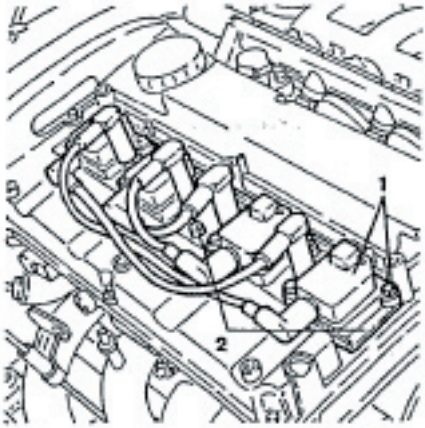

1. Slacken the fastening screws and remove the cylinder head cover complete with seal.

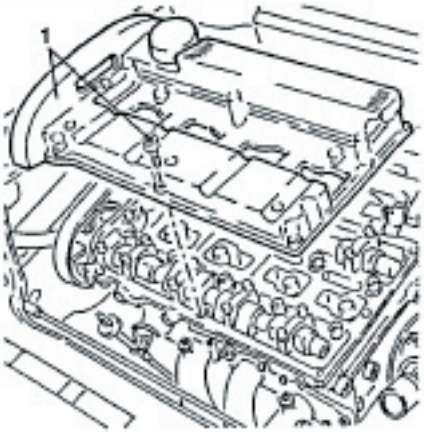

Alfawiki.nl

1. Install tool no. 1.825.013.000 (C.6.0183) fitted with dial gauge in the seat of the first cylinder spark plug.
- Turn the crankshaft in its direction of rotation, until the piston of the 1st cylinder reaches the T.D.C. in the bursting stroke.
2. Remove the camshaft caps illustrated and in their place install templates no. 1.825.041.000 tightening the fastening screws to a maximum torque of 10 Nm (1 kgm) and ensuring correct coupling with the cams.
3. Slacken the four screws fastening the camshaft pulley on the intake side.
4. Slacken the screw fastening the timing pulley on the exhaust side.

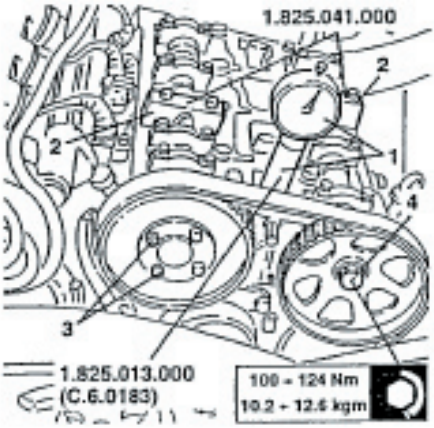

1. Working on the timing belt tensioner slacken the tension of the belt, then remove it.

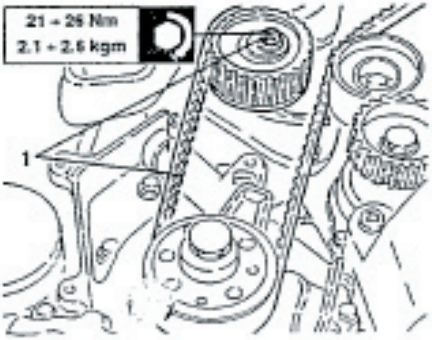

- Install a new timing belt proceeding as described i "ENGINE OVERHAULING" paragraph "Assembly timing belt and checking timing".
- Install the counter-rotating shafts control belt proceeing as described in "ENGINE OVERHAULING" paragraph "Assembly of counter-rotating shafts control be and timing".
- Complete re-assembly reversing the sequence fo lowed for removal.

CHANGING THE TIMING GEAR BELT (For engines without counter-rotating shafts)

- Set the car on a lift.
- Disconnect the battery (-) terminal.
- Remove the right front wheel and mud flap.
1. Working as illustrated on the guide pulley, slacken th tension of the auxiliary components control belt an remove it.
2. Slacken the four fastening screws and remove th auxiliary components control belt.

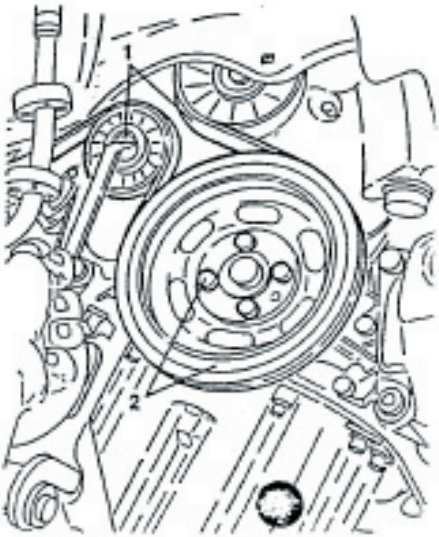

Alfawiki.nl

1. Slacken the fastening screw and remove the auxiliary components control belt guide pulley.

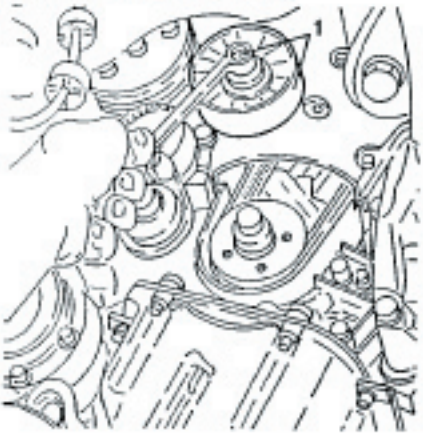

- Slacken the lower screws of the timing belt guard.

1. Lower the car, slackening the remaining fastening screws and remove the timing belt guard.

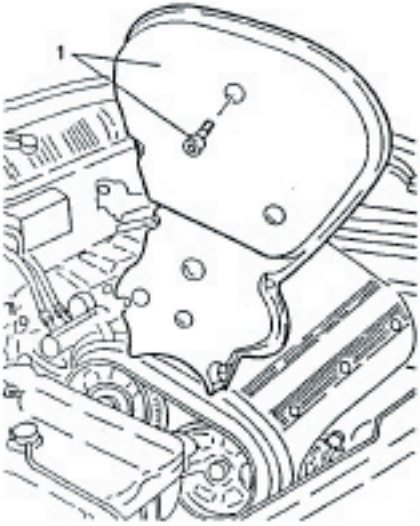

1. Slacken the fastening screws and remove the cover of the ignition coils.

2. Disconnect the electrical connections from the ignition coils.

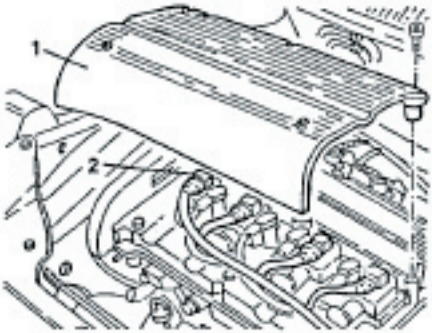

1. Slacken the fastening screws and remove the ignition coils.

2. Slacken the fastening screws and remove the ignition coils support bracket.

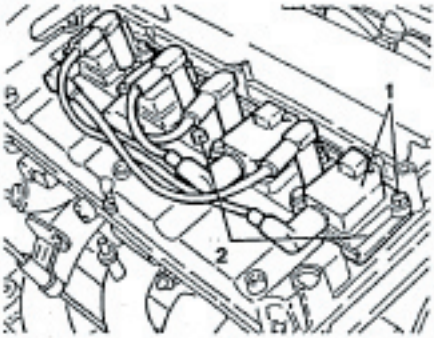

1. Slacken the fastening screws and remove the cylinder head cover complete with seal.

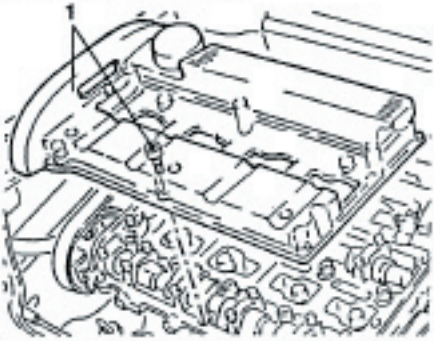

Alfawiki.nl

1. Install tool no. 1.825.013.000 (C.6.0183) fitted with dial gauge in the seat of the first cylinder spark plug.
- Turn the crankshaft in its direction of rotation, until the piston of the 1st cylinder reaches the T.D.C. in the bursting stroke.
2. Remove the camshaft caps illustrated and in their place install templates, tightening the fastening screws to a maximum torque of 10 Nm (1 kgm) and ensuring correct coupling with the cams.
3. Slacken the four screws fastening the camshaft pulley on the intake side.
4. Slacken the screw fastening the timing pulley on the exhaust side.

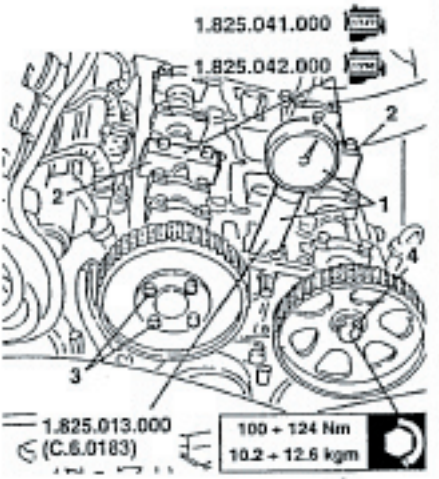

1. Working on the timing belt tensioner slacken the tension of the belt, then remove it.

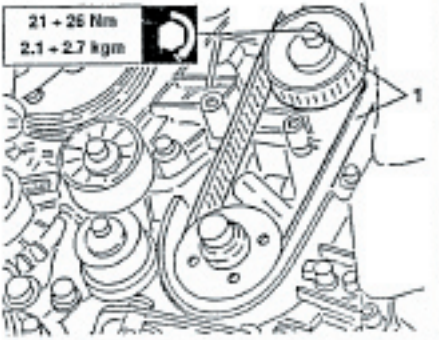

- Install a new timing belt proceeding as described in "ENGINE OVERHAULING" paragraph "Assembly of timing belt and checking timing".
- Complete re-assembly reversing the sequence followed for removal.

AUXILIARY COMPONENT BELT

The auxiliary components of the engine are driven by a single Poly V belt.
This belt is tensioned by an automatic tensioner: therefore checking the tension is unnecessary.

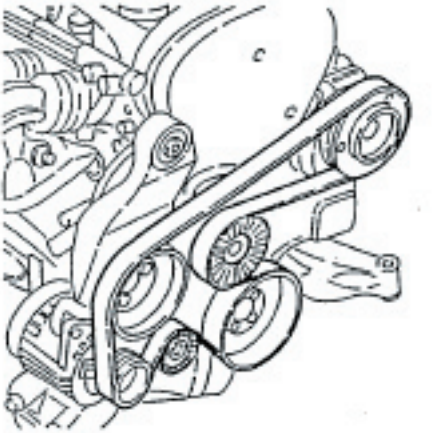

Checking and replacement

- Set the car on a lift.
- Remove the right front wheel and mud flap.
- Check visually that the belt is intact and that it is free of:
  - cuts and cracks
  - material surface wear (smooth and shiny)
  - dry or stiff parts (lack of adherence).

Alfawiki.nl

in the event of one of the above defects, change the belt.

WARNING:
The contact of the belt with oil or solvents can damage the elasticity of the actual belt rubber and reduce its adherence.

1. Proceeding as illustrated on the guide pulley, slacken the tension of the auxiliary components drive belt and remove it.

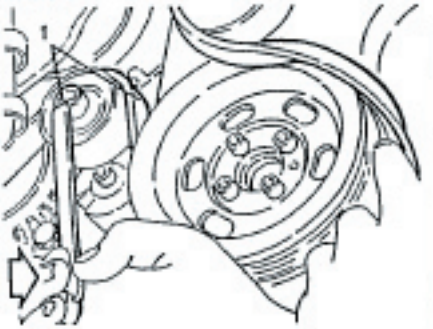

- Install a new belt reversing the sequence followed for removal.

CHANGING THE AIR CLEANER CARTRIDGE

1. Slacken the four air cleaner cover fastening screws.
2. Slacken the clamp fastening the air cleaner cover to the corrugated sleeve.

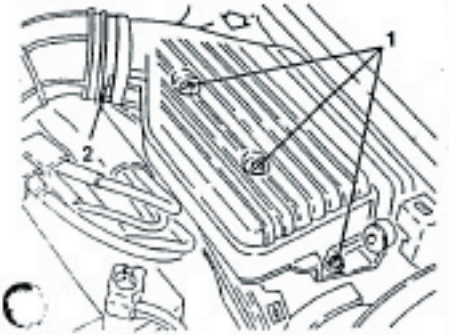

1. Remove the air cleaner cover.
2. Remove the air cleaner cartridge.

WARNING:
Any filter cleaning operation might damage it, thereby adversely affecting the correct operation of the engine.

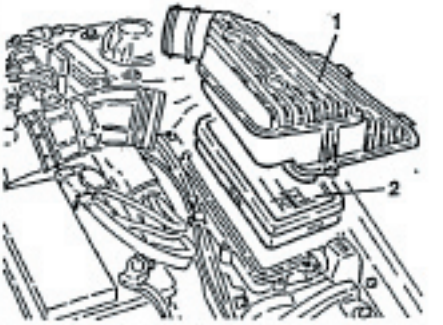

CHANGING THE FUEL FILTER

- Set the car on a lift and raise it.
- Remove the fuel filter guard.

1. Disconnect the fuel inlet hose connection from the filter.
2. Disconnect the fuel outlet hose connection from the filter.
3. Slacken the fastening clamp and remove the fuel filter.

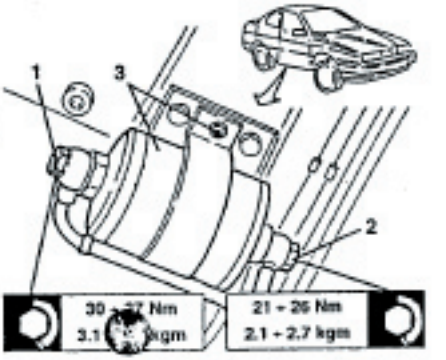

Alfawiki.nl

- Install the new filter reversing the sequence followed for removal and taking care to:
- change the copper gaskets of the connections;
- assemble the filter with the arrow stamped on it pointing in the direction of the flow of fuel.

CHECKING AND CHANGING SPARK PLUGS

The standard spark plugs are of the surface discharge type with one point and a centre electrode.
In order to operate correctly, the gap between the electrodes must be correct.
The spark plugs are positioned in the bursting chamber asymmetrically and they differ in size as illustrated below.

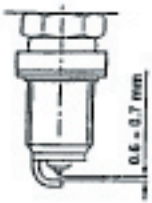

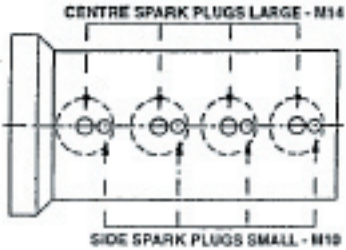

Spark plugs	
Centre spark plugs (large - M14)	NGK PFR6B (*)
	NGK BKR6EKPA
Side spark plugs (small - M10)	NGK PMR7A

(*): Specific for T. SPARK 16V version.

- With the engine cold, remove the spark plugs, firstly blowing inside the spark plug openings to remove any impurities and traces of dirt.

- Check the spark plugs for dirt and the ceramic insulation for breaks. In this case replace the spark plugs.

WARNING:
The use of spark plugs with different characteristics or sizes than those specified can cause serious damage to the engine and change the level of harmful emissions at the exhaust.

WARNING:
A dirty or worn out spark plug is often the sign of a failure in the engine supply system.
For example:
- **Traces of carbon dust: incorrect mixture, air cleaner very dirty.**
- **Spots of oil: oil leaking from the piston rings.**
- **Formation of ash: presence of aluminium materials, contained in the oil.**
- **Burnt electrodes: overheating due to unsuitable fuel, defects in the valves.**
- **High electrode wear: harmful additives in the fuel or in the oil, pinging in the cylinder head.**
- **Etc.**

- When installing tighten the spark plugs to the following torque:

Centre spark plugs (large - M14)	25 ÷ 35 Nm 2.5 ÷ 3.6 kgm
Side spark plugs (small - M10)	10 ÷ 12 Nm 1 ÷ 1.2 kgm

Alfawiki.nl

CHECKING THE LEVEL AND CHANGING GEARBOX/DIFERENTIAL OIL

Checking the oil level

- Set the car on a lift.

1. Disconnect and unscrew the reversing light switch and check that the level of the oil reaches the lower edge of the filler hole.
2. If necessary, remove the filler cap and top up.

- Refit the filler cap and the switch.
- Reconnect the electrical connection.

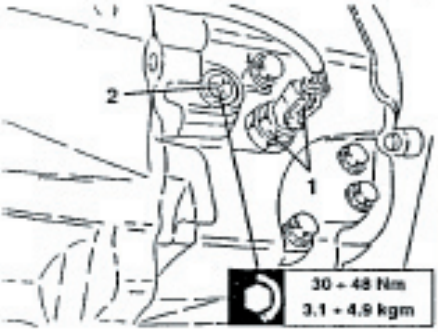

Changing the oil

- Set the car on a lift.

1. Remove the filler cap (1a), the reversing light switch (1b) and the drain cap (1c).

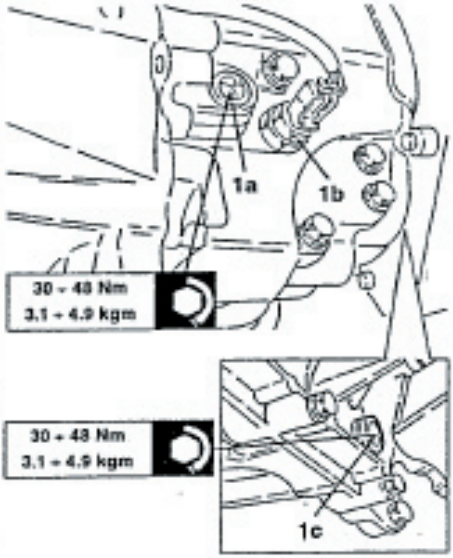

- Allow the oil to drain off completely.
- Clean the drain cap and screw it back on.
- Fill with oil of the specified type and quantity, through the filler hole.
- When the correct level has been reached (see previous paragraph) screw the filler cap and reversing light switch back on and reconnect the electrical connection.

Alfawiki.nl

TECHNICAL CHARACTERISTICS AND SPECIFICATIONS

SPARK PLUGS

Type (*)	Centre spark plugs (large - M14)	NGK PFR6B (▲) NGK BKR6EKPA
	Side spark plugs (small - M10)	NGK PMR7A

(*): Two different spark plugs for type are installed on each cylinder.

(▲): Specific for T. SPARK 16V version.

TIGHTENING TORQUES

Part		Nm	kgm
Oil sump drain plug		17 ÷ 21	1.7 ÷ 2.1
Auxiliary components drive pulley fastening screws		24 ÷ 29	2.4 ÷ 3.0
Exhaust side camshaft drive pulley fastening screw		100 ÷ 124	10.2 ÷ 12.6
Timing belt tensioner fastening nut		21 ÷ 26	2.1 ÷ 2.6
Filter fuel outlet fitting		21 ÷ 26	2.1 ÷ 2.7
Filter fuel inlet fitting		30 ÷ 37	3.1 ÷ 3.8
Spark plugs	Centre spark plugs (large - M14)	25 ÷ 35	2.5 ÷ 3.6
	Side spark plugs (small - M10)	10 ÷ 12	1 ÷ 1.2
Gearbox oil filler cap		30 ÷ 48	3.1 ÷ 4.9
Gearbox oil drain cap		30 ÷ 48	3.1 ÷ 4.9

SPECIAL TOOLING

1.825.013.000 (C.6.0183)	Tool for checking T.D.C.
1.825.041.000	Camshaft timing templates (For engines)
1.825.042.000	Camshaft timing templates (For engine)

Alfawiki.nl

SERVICE

DIREZIONE POST-VENDITA
SERVIZI ASSISTENZIALI
Viale Alfa Romeo 20020 Arese (MI)
Fiat Auto S.p.A.

Pubblic. PA465500000005 - 5/95
Printed in Italy by Tip. Bogliani - Torino

All rights reserved.
Reproduction, even partial, without the express permission in writing from Fiat Auto S.p.A. is prohibited

Alfawiki.nl